Wear sleeves

SPEEDI-SLEEVE and Large diameter wear sleeves



Contents

3 The SPEEDI-SLEEVE concept

4 The characteristics

5 SPEEDI-SLEEVE Gold

6 Installing a SPEEDI-SLEEVE

8 Product tables
8 Metric dimensions
20 Inch dimensions

32 Large diameter wear sleeves

34 Product tables
34 Metric dimensions
36 Inch dimensions

42 SKF – the knowledge engineering company

The SKF brand now stands for more than ever before, and means more to you as a valued customer.

While SKF maintains its leadership as the hallmark of quality bearings throughout the world, new dimensions in technical advances, product support and services have evolved SKF into a truly solutions-oriented supplier, creating greater value for customers.

These solutions encompass ways to bring greater productivity to customers, not only with breakthrough application-specific products, but also through leading-edge design simulation tools and consultancy services, plant asset efficiency maintenance programmes, and the industry's most advanced supply management techniques.

The SKF brand still stands for the very best in rolling bearings, but it now stands for much more.

SKF – the knowledge engineering company

The SPEEDI-SLEEVE concept

The fast and easy solution to worn shafts

To seal efficiently, radial shaft seals must run against a smooth, round surface – the seal counterface. If the counterface becomes worn, the seal will no longer be able to fulfil its function, which is to retain lubricant and to exclude contaminants.

Typically, the counterface becomes scored when a contaminant particle is caught under the seal lip and abrades a track as the shaft rotates. As this continues, the seal will allow more particles to pass or get stuck, and seal efficiency deteriorates, eventually leading to malfunction of the component that the seal is meant to protect. To rectify the situation, it is necessary to repair the shaft surface since a simple seal replacement will not be sufficient. To repair the shaft, it is usually necessary to disassemble the machine in order to either replace the shaft with a new one or to be able to grind down the counterface until it is within specification again. However, if the grooves are deep, metal must first be added and then the shaft has to be ground down to restore the original diameter. Otherwise a new seal will not function properly.

However, there is an easy solution to this problem that allows the shaft to be held in position and does not require you to specify a different seal size. The solution is the SPEEDI-SLEEVE from SKF.

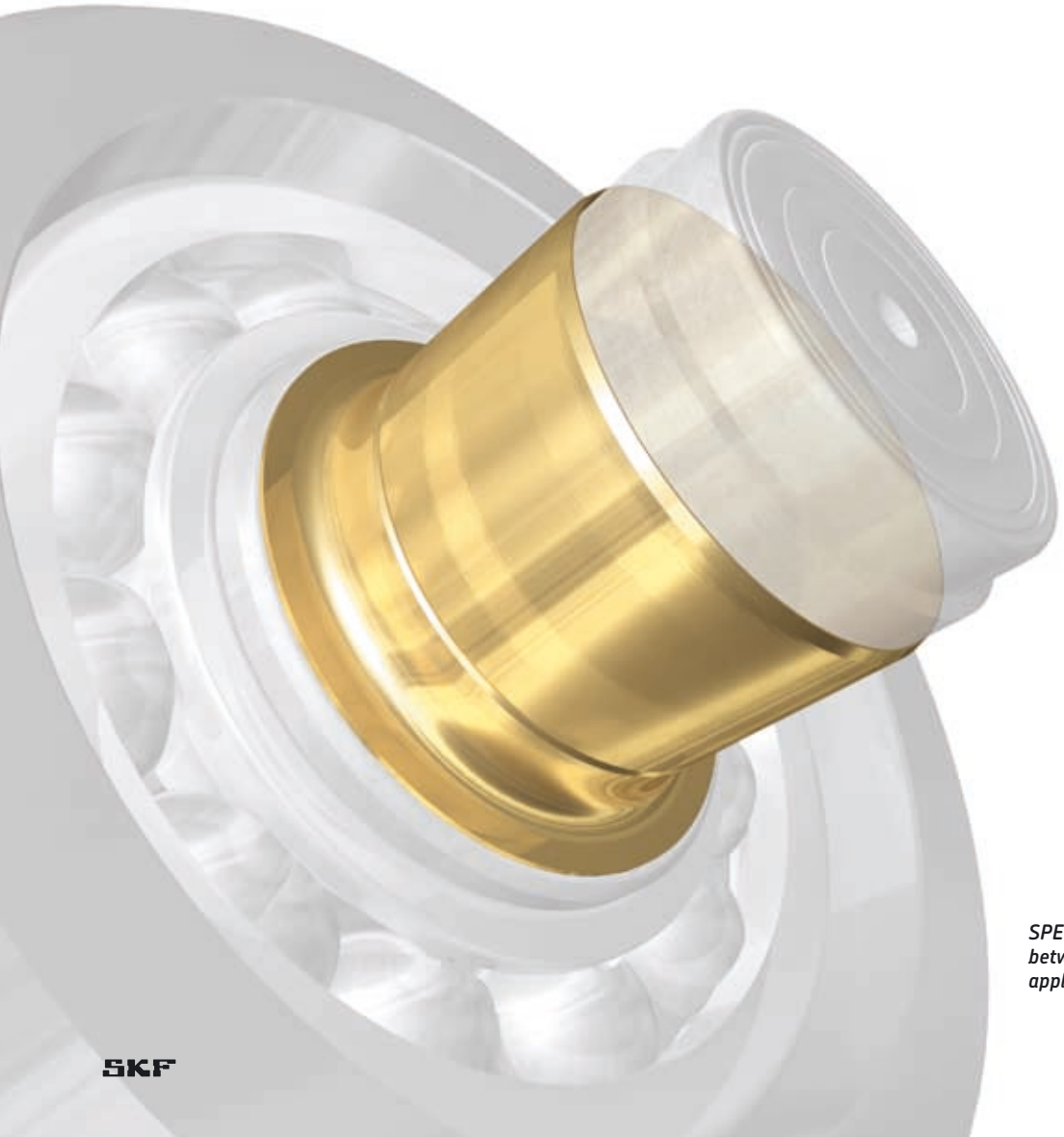

SPEEDI-SLEEVE Gold with a surface hardness between 80 and 85 HRC for heavy-duty applications

The characteristics

A simple idea with an impressive effect

The SPEEDI-SLEEVE has been developed by SKF to solve the problem of worn seal counterfaces at shaft ends. This thin-walled sleeve has a high quality finish to provide an optimal counterface for a radial shaft seal.The sleeve is simply pushed in position over the worn area providing a sealing surface that is as good as a new shaft, if not better.

There is no shaft disassembly or machining involved and costly downtime is minimized. Since the same sized seal as the original can be used, there is no need to search for other seals, or keep a stock of different sizes, which also results in time saved.

No special equipment is required since the installation tool is supplied with the sleeve. A mallet and a pair of pliers are all that is needed for the installation.

Features

The SPEEDI-SLEEVE is thin-walled, 0,28 mm (0.011 in.), and made of high quality stainless steel. The contact surface is wear-resistant and machined to minimize directionality (0° ±0,05) with a finish of R_a 0,25 to 0,5 µm (10 to 20 µin.), depending on size. This is, in fact, a better counterface than can often be achieved on a shaft. The SPEEDI-SLEEVE has a removable flange to simplify the installation (→ **fig. 1**). For applications where space is limited, or multiple sleeves are necessary, the flange can be removed after the sleeve is set in position.

Size range

The standard size range covers shaft diameters from 11,91 to 203,33 mm (0.472 to 8 in.). Depending on production quantities, non-standard sizes can be produced. Each sleeve, inch or metric, is designed to fit a specific shaft range, usually above and below the nominal shaft diameter. This permits some flexibility to accommodate variations in the actual shaft size.

Fig. 1

SPEEDI-SLEEVE removable flange

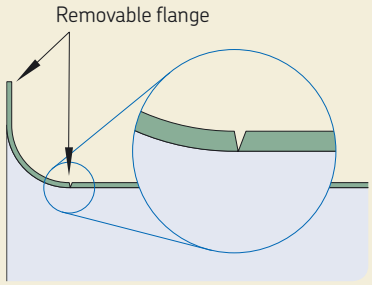



SPEEDI-SLEEVE – as good as a new shaft, if not better

SPEEDI-SLEEVE Gold

The preferred choice for harsh service conditions

SPEEDI-SLEEVE Gold

SPEEDI-SLEEVE Gold is an enhanced version of the standard SPEEDI-SLEEVE offering improved resistance to abrasive wear. Designed to be used in applications where extended sealing system life is needed, SPEEDI-SLEEVE Gold bridges the performance gap between the standard sleeve and expensive custom shaft treatments. A thin, metallic film applied to the base stainless steel imparts a gold colour and significantly increases durability and surface hardness to approximately 2 300 Vickers[1] or 80 to 85 HRC. The SPEEDI-SLEEVE Gold is particularly effective in environments where there are abrasive contaminants, especially when combined with a seal manufactured in the SKF fluoro rubber material LongLife.

The installation procedure is identical to that of a standard SPEEDI-SLEEVE and the original seal size can still be used.

Test results

The SPEEDI-SLEEVE Gold has been thoroughly tested to establish its level of abrasion resistance in severely contaminated environments using both coarse and fine sand (**→ diagram 1**). The tests were carried out at temperatures up to 110 °C (225 °F) and at shaft speeds of up to 8,6 m/s (1 693 ft./min.). Under these conditions, seals on shafts without SPEEDI-SLEEVE Gold protection started to leak after 450 hours on average. Seals on SPEEDI-SLEEVE Gold ran for an average of 2 500 hours.

In other tests it was found that continuous salt spray at 35 °C (95 °F) produced no trace of corrosion even after 600 hours.

Size range and availability

SPEEDI-SLEEVE Gold is available from stock in a selection of common sizes. Other sizes up to 203,2 mm (8 in.) can be produced to special order.



SPEEDI-SLEEVE Gold

Diagram 1

Average wear resistance
Testing in highly abrasive conditions demonstrates how the hardened surface of SPEEDI-SLEEVE Gold resists wear

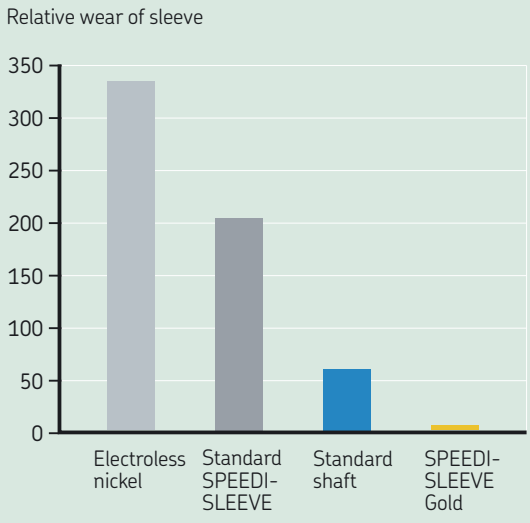

[1] Due to the thin wall construction of SPEEDI-SLEEVE, this can only be accurately measured using highly specialized instruments and methods

Installing a SPEEDI-SLEEVE

A new seal counterface in a few minutes

Although installation is simple, it should be done carefully to achieve the best results. As the thin-walled sleeve has an interference fit, any disturbances on the shaft surface may create a similar pattern on the sleeve surface and the seal will leak. Therefore, the seal counter surface of the shaft should be carefully cleaned and any burrs or rough spots should be filed down prior to installation. Deep wear grooves, scratches or very rough surfaces should be treated with a suitable powdered metal epoxy filler. The sleeve must be positioned on the shaft before the filler has hardened.

It should also be noted that, although a SPEEDI-SLEEVE can be easily installed in minutes on most shafts, it should not be placed over ports, splines or keyways etc. on the shaft. See **fig. 2** for different SPEEDI-SLEEVE installations.

Choosing the right size

To determine the appropriate sleeve size it is first necessary to clean the shaft carefully. The diameter of an undamaged section of the seal counterface should then be measured on at least three different planes. The arithmetical mean of these measurements determines the size of the SPEEDI-SLEEVE. If the value lies within the permissible range shown in the product table for the shaft diameter d_1, the SPEEDI-SLEEVE will have an adequately tight fit on the shaft and will not require an adhesive.

If no suitable sleeve is listed in the product table, it will be necessary to rework the shaft to an appropriate dimension. This also means that a new size of seal will be required. If production quantities are sufficient enough, SKF can provide a specially dimensioned SPEEDI-SLEEVE or other wear sleeve solution.

Fig. 2

SPEEDI-SLEEVE installations

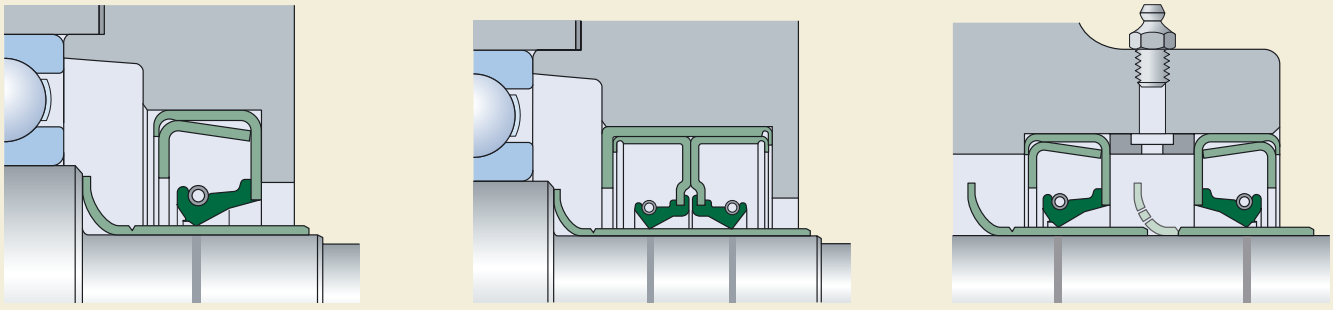

Fig. 3

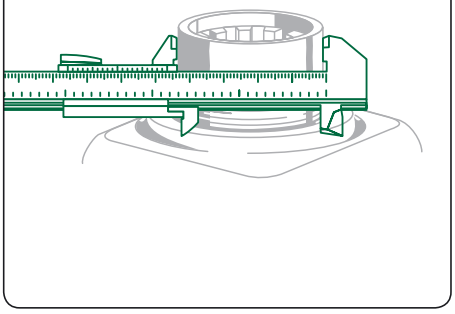

Clean and measure the diameter of the worn shaft and mark the area where the sleeve will cover the scored portion of the shaft.

Fig. 4

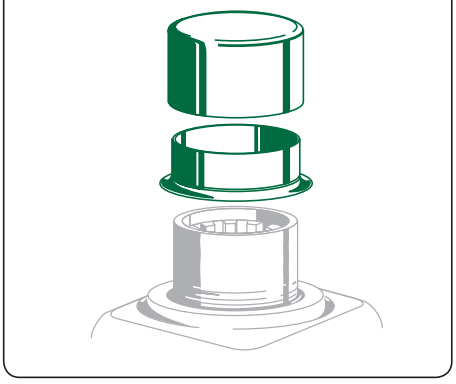

Place the SPEEDI-SLEEVE on the shaft and then place the special installation tool over the sleeve.

Fig. 5

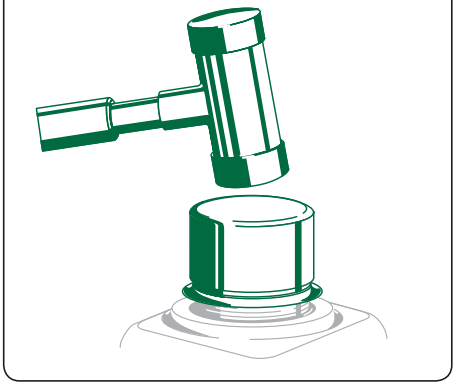

Tap installation tool with mallet until the sleeve is seated on shaft over the marked area. Remove the installation tool.

Installation procedure

1. Clean the seal counter surface on the shaft. File down any burrs or rough spots.
2. Measure the diameter where the sleeve will be positioned on an unworn portion of the shaft (→ **fig. 3**). Measure in three positions and average the readings (to insure the shaft is within recommended specifications). If the mean diameter is within the range for a given sleeve size, there is sufficient press fit built into the sleeve to prevent it from sliding or spinning without using an adhesive.
3. Determine where the sleeve must be positioned to cover the seal wear track. Measure to the exact point, or mark directly on the surface. The sleeve must be placed over the worn area, not just bottomed or left flush with the end of the shaft.
4. Shallow wear grooves do not require filling. Optionally, a light layer of a non-hardening sealant, e.g. Loctite 209, can be applied to the inside diameter surface of the sleeve. Clean away sealant that migrates to the shaft or sleeve outside diameter surface.
5. If the shaft is deeply scored (see note above) fill the groove with a powdered metal epoxy type filler[1]. Install the sleeve before the filler hardens, allowing the sleeve to wipe off any excess filler. Clean away any remaining filler from the sleeve outside diameter surface.
6. The flange end of the sleeve goes on the shaft first. Then place installation tool over the sleeve (→ **fig. 4**).
7. Gently tap the centre of the installation tool until the sleeve covers the seal worn surface (→ **fig. 5**). If the installation tool is too short, a length of pipe or tubing with a squared-off, burr-free end can be used. Be sure that the inside diameter of the pipe is the same as that of the installation tool. Use care not to scratch the precision ground sleeve outside diameter.
8. Leave the flange intact unless clearance is required. If the flange is to be removed, cut the flange perpendicular to the tear-off groove with a metal shear. Cut only into the tear-off groove, not onto the finished sleeve surface. After positioning the sleeve, use standard pliers to bend the flange back and forth around its circumference and along the shaft axis. The flange will break loose along the tear-off groove. Alternately, grasp the flange away from the seal surface and twist it into a coil being careful not to lift the end of the sleeve off the shaft or it will leave a jagged edge. Flange removal must be done with care to avoid damage to the sleeve outside diameter.
9. After the sleeve is installed, check again for burrs, which could damage the seal.
10. Lubricate the sleeve with the system medium before installing the seal.
11. Proceed with the seal installation.

Removing a SPEEDI-SLEEVE

A SPEEDI-SLEEVE can be removed by applying heat to the sleeve with an electric heat blower, which will expand it enough to let it slide off the shaft without causing damage.

Alternatively, the sleeve can be removed in any of the following ways, always using care not to damage the shaft surface;

- by relieving the press fit tension using a small hammer to peen across the full width of the sleeve
- by using a cold chisel to cut through the sleeve
- by using a pair of wire cutters starting at or near the flange and applying a twisting motion.

Please note that a SPEEDI-SLEEVE cannot be reused.

[1] Loctite "Quickmetal" (#66010) or similar works well for filling a deep groove and can be used as an adhesive or sealant if desired. Use of an adhesive can, however, make the removal of the sleeve slightly more difficult.

SPEEDI-SLEEVE – metric sizes
d_1 **11,91 – 34,01** mm

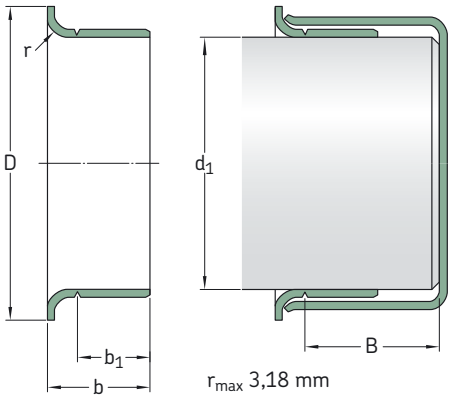

Shaft diameter range		Nominal dimensions					Designation
d_1		d_1	D ±1,6	b_1 ±0,8	b ±0,8	B[1)]	
min	max						
mm		mm					–
11,91	**12,07**	12,00	15,50	6,00	8,40	47,60	**99049**
12,65	**12,75**	12,70	19,05	6,35	9,93	46,51	**99050**
13,89	**14,00**	14,00	19,05	6,35	9,93	46,51	**99055**
14,22	**14,38**	14,30	19,05	6,35	9,93	46,51	**99056**
14,96	**15,06**	15,00	19,05	5,00	8,99	47,29	**99059**
15,83	**15,93**	15,88 15,88	19,05 19,05	7,95 7,95	10,31 10,31	50,80 50,80	**99062** **99810 ***
15,89	**16,00**	16,00	18,24	7,95	11,10	50,80	**99058**
16,94	**17,04**	17,00	22,23	7,95	11,00	50,80	**99068**
17,32	**17,42**	17,37	22,86	7,95	11,13	50,80	**99060**
17,87	**18,00**	18,00	24,43	8,00	11,00	46,00	**99082**
19,00	**19,10**	19,00 19,00	24,00 24,00	7,95 7,95	11,13 11,13	50,80 50,80	**99811 *** **99076**
19,27	**19,33**	19,30	23,83	7,95	11,13	50,80	**99081**
19,81	**19,91**	19,86	23,75	7,95	11,13	50,80	**99080**
19,94	**20,04**	20,00	23,62	8,00	11,00	50,80	**99078**
20,62	**20,70**	20,65	20,65	9,52	14,30	76,20	**99083**
21,77	**21,87**	21,82	29,34	6,35	9,52	50,80	**99086**
21,87	**22,00**	22,00 22,00	30,20 30,17	6,58 8,00	9,09 11,99	47,09 46,05	**99084** **99085**
22,18	**22,28**	22,23 22,23	27,79 27,79	7,95 7,95	11,13 11,13	50,80 50,80	**99812 *** **99087**
23,06	**23,16**	23,11 23,11	30,94 30,94	7,95 7,95	11,13 11,13	46,91 46,91	**99091** **99860 ***
23,87	**24,00**	24,00	28,70	7,95	11,10	50,80	**99092**
24,54	**24,64**	24,59 24,59	28,70 28,70	15,88 7,95	18,26 11,13	50,80 50,80	**99096** **99094**

* Indicates SPEEDI-SLEEVE Gold
[1)] Possible max. distance of rear groove from shaft end when installation tool supplied with sleeve is used

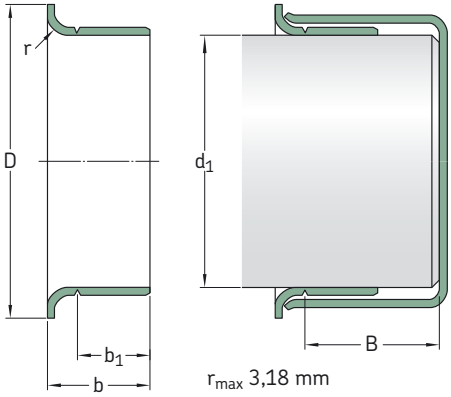

Shaft diameter range		Nominal dimensions					Designation
d_1		d_1	D ±1,6	b_1 ±0,8	b ±0,8	B[1)]	
min	max						
mm		mm					–
24,94	**25,04**	25,00	33,02	7,95	11,00	50,80	**99098**
		25,00	33,02	7,95	11,00	50,80	**99813** *
25,35	**25,45**	25,40	30,96	7,95	11,13	50,80	**99814** *
		25,40	30,96	7,95	11,13	50,80	**99100**
25,88	**26,01**	26,00	33,35	8,00	11,99	46,05	**99103**
26,92	**27,02**	27,00	33,53	7,95	11,13	46,81	**99106**
		27,00	33,53	7,95	11,13	46,81	**99815** *
27,61	**27,71**	27,66	35,71	7,95	11,13	15,88	**99108**
27,94	**28,04**	28,00	34,92	9,52	12,70	46,81	**99111**
		28,00	34,92	9,52	12,70	46,81	**99866** **
28,53	**28,63**	28,58	38,10	7,95	11,13	17,48	**99816** *
		28,58	38,10	7,95	11,13	17,48	**99112**
		28,58	38,10	9,52	12,70	17,48	**99116**
29,31	**29,41**	29,36	34,29	9,52	12,70	17,48	**99120**
		29,36	34,29	9,52	12,70	17,48	**99865** **
29,80	**29,93**	29,85	35,56	7,95	11,13	17,48	**99122**
29,95	**30,08**	30,00	35,56	8,00	11,00	17,48	**99114**
30,10	**30,23**	30,15	35,56	7,95	11,13	17,48	**99118**
30,88	**31,04**	31,00	39,70	7,95	11,00	15,88	**99123**
31,42	**31,58**	31,50	39,12	8,00	11,10	17,48	**99141**
31,67	**31,83**	31,75	38,10	7,95	11,13	17,48	**99125**
		31,75	38,10	7,95	11,13	17,48	**99817** *
31,92	**32,08**	32,00	38,10	8,00	11,13	17,48	**99128**
32,94	**33,04**	33,00	40,49	15,01	18,00	20,65	**99121**
33,22	**33,38**	33,30	40,64	6,35	9,50	20,65	**99129**
33,27	**33,43**	33,35	40,49	12,70	15,88	20,65	**99131**
		33,35	40,49	12,70	15,90	20,65	**99818** **
33,86	**34,01**	34,00	41,28	12,70	15,90	20,70	**99134**

* Indicates SPEEDI-SLEEVE Gold
** Indicates SPEEDI-SLEEVE Gold product – contact SKF for availability
[1)] Possible max. distance of rear groove from shaft end when installation tool supplied with sleeve is used

SPEEDI-SLEEVE – metric sizes

d_1 **34,82 – 48,64** mm

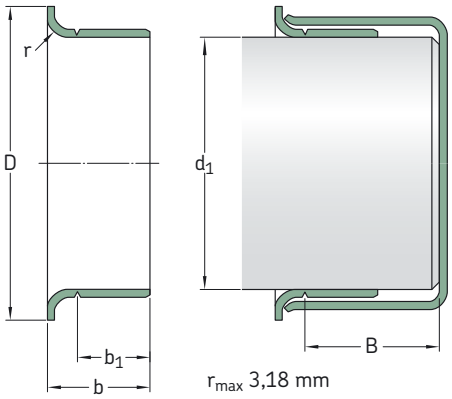

Shaft diameter range		Nominal dimensions					Designation
d_1		d_1	D ±1,6	b_1 ±0,8	b ±0,8	B[1]	
min	max						
mm		mm					–
34,82	**34,98**	34,90	41,60	7,95	11,13	20,65	**99133**
		34,90	41,60	12,70	15,88	20,65	**99138**
		34,92	41,60	12,70	15,88	20,65	**99819** *
34,92	**35,08**	35,00	41,60	13,01	16,00	20,65	**99139**
		35,00	41,60	13,01	16,00	20,65	**99820** *
35,85	**36,00**	36,00	45,24	13,01	16,99	24,99	**99146**
36,37	**36,53**	36,45	45,24	14,30	17,48	25,81	**99143**
		36,53	45,24	14,30	17,48	25,81	**99821** *
36,45	**36,61**	36,53	45,24	9,52	12,70	25,81	**99144**
37,85	**38,00**	38,00	45,24	13,01	16,99	24,99	**99147**
38,02	**38,18**	38,10	45,24	9,52	12,70	25,81	**99150**
		38,10	45,24	14,30	17,48	25,81	**99149**
		38,10	45,24	9,52	12,70	25,81	**99823** *
		38,10	45,24	14,30	17,48	25,81	**99822** *
38,60	**38,76**	38,68	47,22	11,13	14,30	25,81	**99152**
39,34	**39,50**	39,42	47,22	11,13	14,30	25,81	**99155**
39,59	**39,75**	39,70	47,22	14,30	17,48	25,81	**99824** *
		39,67	47,22	14,30	17,48	25,81	**99156**
39,77	**39,93**	39,85	47,22	15,88	19,05	25,81	**99159**
39,84	**40,00**	40,00	46,99	9,91	12,93	25,40	**99153**
39,93	**40,08**	40,00	46,99	13,01	16,00	25,98	**99825** *
	40,09	40,00	46,99	13,01	16,00	25,98	**99157**
40,69	**40,85**	40,77	49,22	12,70	16,28	25,40	**99160**
40,84	**41,00**	41,00	49,20	12,70	15,88	25,81	**99163**
41,20	**41,35**	41,28	47,63	14,30	17,48	20,65	**99826** *
	41,36	41,28	47,63	7,95	11,13	25,81	**99161**
		41,28	47,63	14,30	17,48	20,65	**99162**
41,84	**42,00**	42,00	53,01	11,30	14,50	21,49	**99166**
		42,00	53,01	14,00	18,00	21,01	**99873** **
		42,00	53,01	14,30	17,50	21,01	**99169**

* Indicates SPEEDI-SLEEVE Gold

** Indicates SPEEDI-SLEEVE Gold product – contact SKF for availability

[1] Possible max. distance of rear groove from shaft end when installation tool supplied with sleeve is used

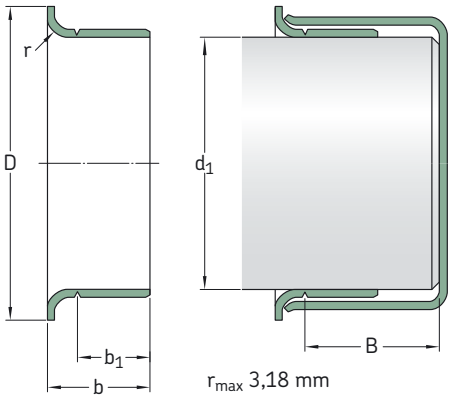

Shaft diameter range		Nominal dimensions					Designation
d_1		d_1	D ±1,6	b_1 ±0,8	b ±0,8	B[1)]	
min	max						
mm		mm					–
41,98	**42,14**	42,06	53,01	13,97	17,50	21,01	**99165**
42,78	**42,93**	42,85	48,41	14,30	17,48	22,23	**99168**
42,80	**42,96**	42,88	48,41	7,95	11,13	22,23	**99167**
42,84	**43,00**	43,00	48,41	12,70	15,88	21,41	**99182**
43,56	**43,72**	43,64	51,59	14,30	17,48	20,65	**99171**
44,09	**44,25**	44,17	52,40	9,52	12,70	20,65	**99170**
44,37	**44,53**	44,45	52,20	9,52	12,70	20,65	**99172**
		44,45	52,40	13,49	15,88	22,23	**99180**
		44,45	52,40	14,30	17,48	20,65	**99174**
		44,45	52,40	19,05	22,23	20,65	**99175**
		44,45	52,40	14,30	17,48	20,65	**99827** *
		44,45	52,40	19,05	22,23	20,65	**99828** *
44,73	**44,88**	44,86	52,40	14,30	17,48	20,65	**99829** *
	44,89	44,81	53,01	13,99	16,99	20,65	**99176**
44,93	**45,09**	45,00	53,01	13,99	16,99	20,63	**99177**
	45,08	45,00	53,97	16,87	20,32	26,98	**99830** *
45,16	**45,32**	45,24	53,09	14,30	17,48	25,40	**99179**
45,94	**46,10**	46,05	53,09	14,30	17,48	25,40	**99181**
45,95	**46,10**	46,05	54,76	14,30	17,48	25,40	**99831** **
47,16	**47,32**	47,24	55,58	22,58	17,48	25,40	**99185**
47,39	**47,55**	47,45	55,95	22,58	26,03	25,40	**99186**
47,55	**47,70**	47,63	55,96	14,30	17,48	25,40	**99832** *
	47,71	47,63	55,96	4,45	7,49	18,90	**99190**
		47,63	55,96	7,49	10,54	18,90	**99188**
		47,63	55,96	9,53	13,11	26,67	**99184**
		47,63	55,96	14,30	17,48	25,40	**99187**
47,93	**48,09**	48,00	56,01	14,00	16,97	24,99	**99189**
48,48	**48,64**	48,56	56,36	9,53	12,70	25,40	**99192**

* Indicates SPEEDI-SLEEVE Gold
** Indicates SPEEDI-SLEEVE Gold product – contact SKF for availability
[1)] Possible max. distance of rear groove from shaft end when installation tool supplied with sleeve is used

SPEEDI-SLEEVE – metric sizes
d_1 **49,12 – 69,42** mm

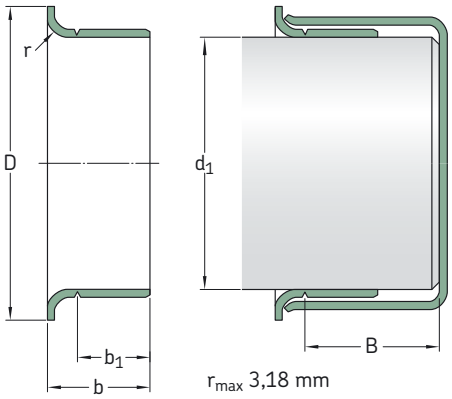

Shaft diameter range		Nominal dimensions					Designation
d_1		d_1	D ±1,6	b_1 ±0,8	b ±0,8	B[1)]	
min	max						
mm		mm					–
49,12	**49,28**	49,20	56,36	14,30	17,48	25,40	**99193**
		49,22	56,36	14,30	17,48	25,40	**99833 ***
49,91	**50,07**	50,00	57,00	14,00	17,00	24,99	**99196**
50,21	**50,37**	50,30	58,75	14,30	17,88	26,67	**99198**
50,72	**50,88**	50,80	61,11	14,30	17,48	25,40	**99199**
		50,80	61,11	22,23	25,40	25,40	**99200**
		50,80	61,11	14,30	17,48	25,40	**99834 ***
		50,80	61,11	22,23	25,40	25,40	**99835 ***
51,81	**52,00**	52,00	62,71	12,70	15,88	34,52	**99204**
52,24	**52,40**	52,32	62,71	19,84	23,83	34,93	**99205**
53,92	**54,06**	54,00	61,52	12,70	19,05	32,54	**99210**
53,95	**54,10**	54,00	61,52	19,84	23,83	34,92	**99836 ***
	54,11	54,00	61,52	19,84	23,83	34,93	**99212**
54,91	**55,07**	54,99	62,00	19,99	22,99	31,75	**99863 ***
		55,00	62,00	19,99	22,99	31,75	**99215**
55,52	**55,68**	55,60	63,50	19,84	23,83	33,35	**99218**
55,81	**56,00**	56,00	64,29	19,79	23,77	80,01	**99224**
		56,00	64,29	12,70	15,88	33,35	**99220**
56,56	**56,72**	56,64	64,29	12,70	15,88	33,35	**99229**
		56,64	64,29	19,84	23,01	31,75	**99230**
56,57	**56,72**	56,64	64,29	12,70	15,88	33,35	**99861 ****
56,82	**56,98**	56,90	65,10	19,41	22,86	31,75	**99226**
57,12	**57,28**	57,15	64,29	19,84	23,83	33,35	**99837 ***
		57,20	64,29	7,95	11,13	33,35	**99227**
		57,20	64,29	19,84	23,83	33,35	**99225**
57,13	**57,28**	57,15	64,29	7,95	11,13	33,35	**99838 ****
57,91	**58,06**	58,00	65,99	19,84	23,83	34,92	**99219**
58,64	**58,80**	58,72	68,28	19,84	23,83	34,93	**99231**
59,10	**59,26**	59,18	69,85	19,05	22,23	38,10	**99233**

* Indicates SPEEDI-SLEEVE Gold
** Indicates SPEEDI-SLEEVE Gold product – contact SKF for availability
[1)] Possible max. distance of rear groove from shaft end when installation tool supplied with sleeve is used

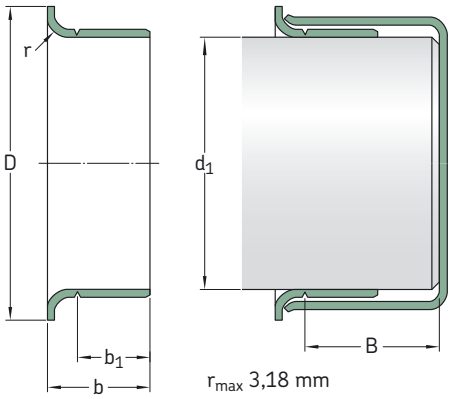

Shaft diameter range		Nominal dimensions					Designation
d_1		d_1	D ±1,6	b_1 ±0,8	b ±0,8	$B^{1)}$	
min	max						
mm		mm					–
59,91	**60,07**	60,00	70,74	20,00	23,00	34,93	**99869** **
		60,00	70,74	20,00	23,00	34,93	**99235**
59,92	**60,08**	60,00	70,74	9,40	11,43	37,36	**99241**
60,25	**60,41**	60,33	69,85	15,09	19,05	34,93	**99238**
60,30	**60,46**	60,38	69,85	13,36	17,35	34,93	**99240**
		60,33	69,85	19,84	23,83	34,93	**99839** *
		60,38	69,85	19,84	23,83	34,93	**99237**
61,81	**62,00**	62,00	71,83	12,70	15,88	36,20	**99244**
61,82	**61,98**	61,90	71,83	19,84	23,83	35,38	**99243**
61,85	**62,01**	62,00	71,83	12,70	15,88	36,20	**99242**
63,22	**63,38**	63,30	73,03	19,84	23,83	35,38	**99249**
63,42	**63,58**	63,50	71,63	14,10	16,51	22,61	**99253**
63,50	**63,65**	63,50	71,63	19,84	23,83	34,92	**99840** *
	63,66	63,50	71,83	12,70	16,66	35,38	**99248**
		63,50	71,63	19,84	23,83	34,93	**99250**
63,75	**63,91**	63,83	71,83	19,84	23,01	36,53	**99251**
64,92	**65,08**	65,00	72,39	19,99	22,99	34,93	**99254**
		65,00	72,39	19,99	22,99	34,92	**99841** *
65,02	**65,18**	65,10	73,43	19,84	23,83	34,93	**99256**
65,91	**66,07**	66,00	75,95	19,84	23,83	31,75	**99259**
66,49	**66,65**	66,57	77,39	19,84	23,83	34,93	**99261**
66,57	**66,73**	66,65	77,39	19,84	23,01	34,93	**99264**
66,60	**66,76**	66,68	77,39	12,70	15,88	34,93	**99260**
66,67	**66,83**	66,75	77,39	19,84	23,83	34,93	**99262**
66,68	**66,83**	66,68	77,39	19,84	23,83	34,92	**99842** *
67,81	**68,00**	68,00	79,38	19,05	22,23	42,88	**99266**
69,26	**69,42**	69,34	79,38	19,84	23,01	33,35	**99268**

* Indicates SPEEDI-SLEEVE Gold
** Indicates SPEEDI-SLEEVE Gold product – contact SKF for availability
[1)] Possible max. distance of rear groove from shaft end when installation tool supplied with sleeve is used

SPEEDI-SLEEVE – metric sizes

d_1 **69,59 – 89,06** mm

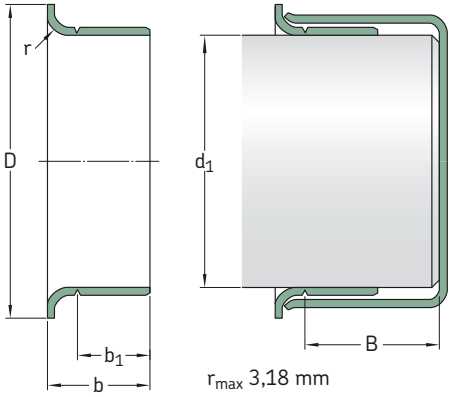

Shaft diameter range		Nominal dimensions					Designation
d_1		d_1	D ±1,6	b_1 ±0,8	b ±0,8	B[1]	
min	max						
mm		mm					–
69,59	**69,75**	69,67	77,85	19,84	23,83	31,75	**99273**
69,72	**69,88**	69,80	79,38	19,84	23,83	31,75	**99274**
		69,85	79,38	19,84	23,83	31,75	**99843 ***
69,77	**69,93**	69,85	78,11	36,53	41,28	41,28	**99267**
69,85	**70,00**	70,00	79,38	19,84	23,83	31,75	**99844 ***
	70,01	70,00	79,38	10,31	14,30	31,75	**99272**
		70,00	79,38	19,84	23,83	31,75	**99275**
		70,00	79,38	28,58	31,75	33,32	**99269**
69,92	**70,08**	70,00	79,38	19,99	24,00	31,75	**99276**
71,34	**71,50**	71,42	80,98	15,09	17,48	31,75	**99281**
71,81	**72,00**	72,00	81,92	19,05	22,23	34,11	**99870 ****
		72,00	81,92	19,05	22,23	34,11	**99284**
72,08	**72,24**	72,16	81,92	12,70	16,66	31,75	**99282**
		72,08	81,92	12,70	16,66	31,75	**99845 ***
72,79	**72,95**	72,87	80,98	19,84	23,83	31,75	**99286**
72,97	**73,13**	73,00	81,76	19,84	23,83	31,75	**99287**
		73,00	81,76	19,84	23,83	31,75	**99846 ***
74,60	**74,75**	74,68	84,94	19,84	23,83	33,35	**99293**
		74,63	84,94	19,84	23,83	33,35	**99847 ***
	74,76	74,68	84,94	12,70	16,28	33,81	**99290**
74,93	**75,09**	75,00	83,13	15,09	17,53	27,51	**99289**
		75,00	83,95	22,00	26,01	33,35	**99875 ****
		75,00	83,95	22,00	26,01	33,35	**99294**
75,49	**75,59**	75,54	82,17	20,62	25,40	31,75	**99292**
75,94	**76,10**	76,02	85,32	12,29	15,88	33,81	**99291**
		76,00	85,32	14,30	17,48	34,93	**99298**
		76,00	85,09	20,65	25,40	32,54	**99299**
76,12	**76,28**	76,20	82,30	20,65	23,83	34,93	**99296**
76,20	**76,36**	76,28	84,96	15,88	20,65	32,51	**99303**
		76,20	82,17	20,65	25,40	32,54	**99848 ***
		76,28	82,17	20,65	25,40	32,54	**99300**

* Indicates SPEEDI-SLEEVE Gold
** Indicates SPEEDI-SLEEVE Gold product – contact SKF for availability
[1] Possible max. distance of rear groove from shaft end when installation tool supplied with sleeve is used

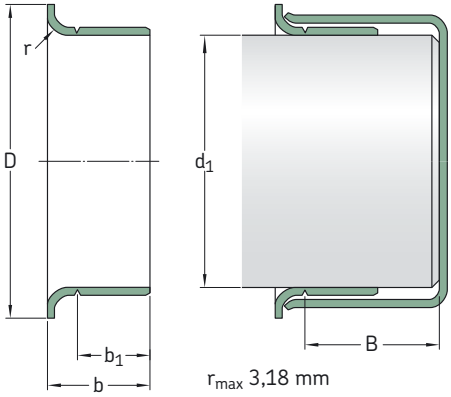

Shaft diameter range		Nominal dimensions					Designation
d_1		d_1	D	b_1	b	B[1)]	
			±1,6	±0,8	±0,8		
min	max						
mm		mm					–
76,40	**76,56**	76,48	85,22	12,70	15,88	50,80	**99301**
77,81	**78,00**	78,00	88,04	19,05	22,23	52,22	**99306**
79,24	**79,40**	79,32	89,69	17,48	20,65	50,80	**99311**
		79,38	89,69	20,65	25,40	50,80	**99849** *
		79,38	89,69	20,65	25,40	50,80	**99312**
79,35	**79,55**	79,38	89,54	14,00	18,01	51,59	**99307**
79,81	**80,01**	80,00	89,92	19,05	22,50	34,93	**99313**
79,90	**80,08**	80,00	89,99	11,00	15,01	34,93	**99317**
79,91	**80,08**	80,00	89,99	21,01	24,00	34,93	**99315**
81,91	**82,07**	82,00	91,06	16,76	21,54	44,45	**99328**
82,47	**82,63**	82,55	91,29	20,65	25,40	34,93	**99322**
82,50	**82,70**	82,50	90,81	15,11	18,26	34,92	**99850** *
82,55	**82,70**	82,55	91,06	20,65	25,40	34,92	**99851** *
	82,71	82,63	90,81	15,11	18,26	34,93	**99324**
		82,63	91,06	17,48	22,23	31,75	**99326**
		82,63	91,06	20,65	25,40	34,93	**99325**
84,00	**84,15**	84,00	93,68	20,65	25,40	34,93	**99331**
84,76	**85,02**	85,00	93,98	16,99	21,00	35,00	**99332**
		85,00	93,98	21,01	24,99	35,00	**99333**
	85,00	85,00	90,93	10,13	12,67	36,35	**99334**
84,88	**85,02**	85,00	93,98	21,01	24,99	35,00	**99872** *
85,67	**85,83**	85,75	93,67	9,53	12,70	35,81	**99338**
		85,75	93,85	20,65	25,40	34,93	**99337**
87,25	**87,41**	87,33	97,64	19,84	23,01	35,71	**99339**
88,31	**88,47**	88,39	97,41	19,84	23,01	35,71	**99340**
88,82	**88,98**	88,98	97,64	15,88	20,65	34,21	**99346**
88,90	**89,05**	89,00	97,64	20,65	25,40	34,21	**99852** *
	89,06	89,00	97,16	7,95	12,70	34,21	**99347**
		89,00	97,64	20,65	25,40	34,21	**99350**

* Indicates SPEEDI-SLEEVE Gold
[1)] Possible max. distance of rear groove from shaft end when installation tool supplied with sleeve is used

SPEEDI-SLEEVE – metric sizes
d_1 **88,90 – 125,10** mm

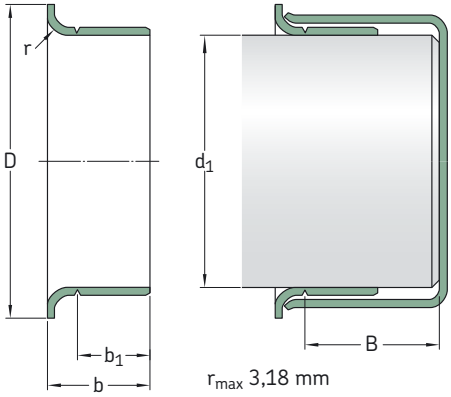

Shaft diameter range		Nominal dimensions					Designation
d_1		d_1	D ±1,6	b_1 ±0,8	b ±0,8	B[1]	
min	max						
mm		mm					–
88,92	**89,08**	89,00	97,64	15,88	20,65	34,24	**99349**
89,91	**90,07**	90,00	101,60	11,13	13,67	46,05	**99352**
		90,00	101,60	13,36	16,94	44,45	**99353**
		90,00	101,60	18,03	23,01	46,05	**99351**
		90,00	101,60	23,01	27,99	44,45	**99354**
90,42	**90,58**	90,50	99,06	20,65	25,40	44,45	**99356**
91,89	**92,05**	92,00	102,39	20,65	25,40	44,45	**99360**
92,02	**92,18**	92,10	102,24	12,70	15,87	44,45	**99363**
		92,10	102,39	20,65	25,40	44,45	**99362**
93,57	**93,73**	93,65	102,39	7,95	11,13	22,23	**99368**
93,60	**93,76**	93,68	102,24	20,65	23,83	45,72	**99365**
94,66	**94,82**	94,74	102,01	11,91	15,09	45,72	**99359**
		94,74	102,24	19,84	23,01	45,72	**99366**
94,92	**95,08**	95,00	102,24	21,01	24,00	45,72	**99369**
94,99	**95,15**	95,00	102,39	8,74	12,70	45,72	**99374**
		95,00	102,49	11,91	15,09	45,72	**99364**
95,14	**95,30**	95,22	102,24	14,30	17,48	45,72	**99376**
95,25	**95,41**	95,33	102,24	8,74	12,70	45,72	**99367**
		95,25	102,11	17,48	22,23	45,72	**99853** *
		95,33	102,11	17,48	22,23	45,72	**99372**
98,24	**98,40**	98,32	106,30	20,65	25,40	47,63	**99386**
98,37	**98,53**	98,45	107,16	20,65	25,40	47,63	**99387**
99,95	**100,11**	100,00	109,55	20,65	25,40	52,07	**99854** *
		100,00	109,55	20,65	25,40	52,07	**99393**
101,55	**101,75**	101,60	111,13	20,65	25,40	52,07	**99855** *
		101,65	111,13	12,70	15,88	52,48	**99401**
		101,65	111,13	15,24	18,42	52,07	**99395**
		101,65	111,13	16,51	19,69	34,93	**99400**
		101,65	111,13	20,65	25,40	52,07	**99399**

* Indicates SPEEDI-SLEEVE Gold
[1] Possible max. distance of rear groove from shaft end when installation tool supplied with sleeve is used

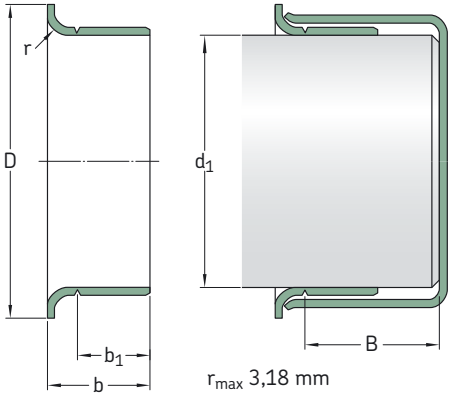

Shaft diameter range		Nominal dimensions					Designation
d_1		d_1	D ±1,6	b_1 ±0,8	b ±0,8	B[1)]	
min	max						
mm		mm					–
103,89	**104,09**	104,00	112,72	19,99	24,00	35,99	**99409**
104,70	**104,90**	104,80	113,54	20,65	25,40	34,93	**99412**
104,90	**105,10**	105,00	113,54	19,99	23,19	35,00	**99413**
106,25	**106,45**	106,35	114,30	20,65	25,40	34,93	**99418**
107,34	**107,54**	107,44	117,09	19,84	23,01	36,53	**99423**
107,90	**108,10**	108,00	117,09	20,65	25,40	36,53	**99424**
109,78	**110,00**	110,00	124,99	11,38	14,96	32,94	**99434**
109,91	**110,11**	110,00	124,99	12,93	16,51	31,75	**99435**
111,00	**111,20**	111,10	120,65	20,65	25,40	41,91	**99437**
111,78	**112,00**	112,00	120,70	19,05	22,50	33,02	**99438**
112,63	**112,83**	112,72	122,25	25,40	29,01	33,35	**99439**
114,20	**114,40**	114,30 114,30	124,46 123,19	20,65 20,65	25,40 25,40	31,75 31,75	**99856** * **99450**
114,89	**115,09**	115,00	127,00	20,65	23,83	31,75	**99452**
117,38	**117,58**	117,48 117,48	127,00 128,60	11,13 25,40	15,88 31,75	34,93 34,93	**99465** **99463**
119,00	**119,20**	119,00	128,60	20,65	25,40	34,93	**99468**
119,89	**120,09**	120,00 120,00	129,79 129,79	8,00 19,99	11,00 24,99	33,60 32,00	**99471** **99473**
120,55	**120,75**	120,65	127,00	12,70	19,05	38,10	**99475**
121,90	**122,10**	122,00	131,49	19,99	24,00	32,00	**99472**
122,91	**123,11**	123,00	132,82	19,99	24,99	31,60	**99484**
123,73	**123,93**	123,83	133,35	15,88	19,05	36,53	**99487**
124,89	**125,09**	125,00	137,16	26,01	32,00	36,53	**99492**
124,90	**125,10**	125,00	137,16	10,00	14,00	36,53	**99490**

* Indicates SPEEDI-SLEEVE Gold
[1)] Possible max. distance of rear groove from shaft end when installation tool supplied with sleeve is used

SPEEDI-SLEEVE – metric sizes

d_1 **126,95 – 203,33** mm

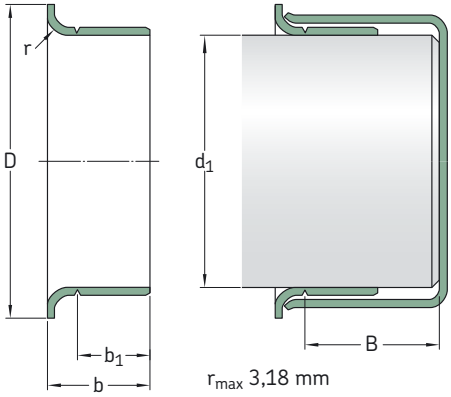

Shaft diameter range		Nominal dimensions					Designation
d_1		d_1	D ±1,6	b_1 ±0,8	b ±0,8	B[1)]	
min	max						
mm		mm					–
126,95	**127,15**	127,00	137,16	17,48	22,23	36,53	**99857 ***
		127,00	139,91	20,65	25,40	36,53	**99858 ***
		127,00	137,16	13,72	17,30	36,53	**99501**
		127,00	137,16	17,48	22,23	36,50	**99498**
		127,00	136,91	20,65	25,40	36,53	**99499**
129,80	**130,00**	130,00	139,52	19,05	23,83	30,00	**99494**
129,97	**130,17**	130,00	139,52	22,00	25,30	32,51	**99874 ****
		130,00	139,52	22,00	25,30	32,51	**99491**
130,05	**130,25**	130,15	139,70	20,65	25,40	31,75	**99513**
133,25	**133,45**	133,35	141,22	20,65	25,40	31,75	**99525**
134,80	**135,00**	135,00	145,67	20,50	25,40	31,75	**99533**
136,43	**136,63**	136,53	149,23	20,65	25,40	31,75	**99537**
138,03	**138,23**	138,13	146,05	38,10	42,88	47,63	**99548**
138,99	**139,19**	139,00	149,86	14,30	19,05	31,34	**99547**
139,65	**139,85**	139,70	150,83	20,65	25,40	31,75	**99859 ****
		139,75	150,83	13,16	17,91	31,75	**99550**
		139,75	150,83	20,65	25,40	31,75	**99549**
139,90	**140,11**	140,00	151,00	20,50	25,40	31,75	**99552**
142,77	**142,98**	142,88	157,18	22,23	25,40	46,02	**99560**
144,75	**145,00**	145,00	154,94	19,05	22,23	46,02	**99571**
145,44	**145,64**	145,54	154,94	14,30	19,05	49,23	**99562**
145,95	**146,15**	146,05	156,97	20,65	25,40	44,45	**99575**
149,13	**149,33**	149,23	157,18	25,40	31,75	33,35	**99862 ***
		149,23	157,18	25,40	31,75	33,35	**99587**
149,75	**150,00**	150,00	159,00	26,01	30,00	32,51	**99595**
150,73	**150,93**	150,83	161,93	25,40	28,58	47,63	**99596**
152,27	**152,47**	152,37	161,54	12,70	19,05	44,45	**99601**
		152,37	161,93	25,40	31,75	44,45	**99599**

* Indicates SPEEDI-SLEEVE Gold
** Indicates SPEEDI-SLEEVE Gold product – contact SKF for availability
[1)] Possible max. distance of rear groove from shaft end when installation tool supplied with sleeve is used

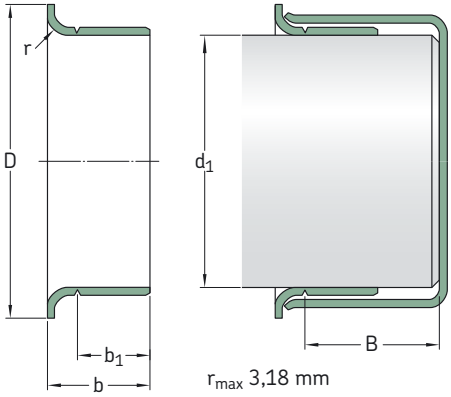

Shaft diameter range		Nominal dimensions					Designation
d_1		d_1	D ±1,6	b_1 ±0,8	b ±0,8	$B^{1)}$	
min	max						
mm		mm					–
153,87	**154,13**	154,00	161,93	26,01	30,00	32,99	**99605**
154,75	**155,00**	155,00	167,01	26,01	30,00	32,99	**99606**
157,43	**157,69**	157,56	168,28	20,65	27,00	44,45	**99620**
158,62	**158,88**	158,75	168,28	26,19	31,75	44,45	**99625**
159,74	**160,00**	160,00	171,45	25,40	31,75	34,93	**99630**
164,97	**165,23**	165,10	177,80	25,40	31,75	34,93	**99650**
169,75	**170,01**	170,00	182,57	31,75	38,00	44,45	**99640**
171,32	**171,58**	171,45	180,98	20,65	27,00	44,45	**99675**
174,75	**175,01**	175,00	187,00	27,99	32,00	35,00	**99687**
177,67	**177,93**	177,80 177,80	189,87 189,87	25,40 25,40	31,75 31,75	42,88 42,88	**99700** **99864 ****
179,75	**180,01**	180,00	190,50	32,99	38,00	44,50	**99721**
183,99	**184,25**	184,00	197,10	31,75	38,10	55,25	**99725**
184,75	**185,00**	185,00	197,10	32,00	38,00	54,99	**99726**
189,07	**189,33**	189,20	199,64	20,65	25,40	31,75	**99745**
190,37	**190,63**	190,50	200,03	20,65	25,40	31,75	**99750**
196,72	**196,98**	196,85	210,06	25,40	33,35	47,63	**99775**
199,87	**200,13**	200,00	212,73	34,52	38,10	44,45	**99787**
201,50	**201,76**	201,63	212,73	25,40	31,75	44,45	**99799**
203,07	**203,33**	203,20	212,73	25,40	31,75	44,45	**99800**

** Indicates SPEEDI-SLEEVE Gold product – contact SKF for availability
1) Possible max. distance of rear groove from shaft end when installation tool supplied with sleeve is used

SPEEDI-SLEEVE – inch sizes

d_1 **0.472 – 1.339** in.

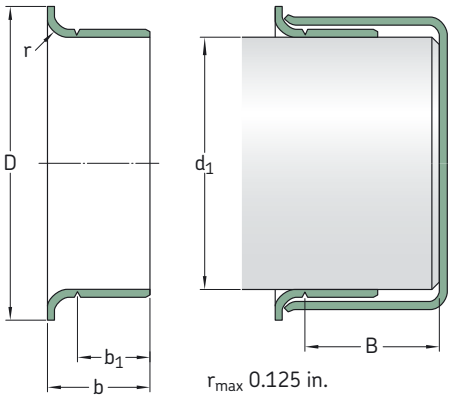

Shaft diameter range		Nominal dimensions					Designation
d_1		d_1	D ±0,063	b_1 ±0,031	b ±0,031	B[1)]	
min	max						
in.		in.					–
0.472	**0.475**	0.472	0.610	0.236	0.331	1.875	**99049**
0.498	**0.502**	0.500	0.610	0.250	0.344	2.000	**99050**
0.547	**0.551**	0.551	0.750	0.250	0.391	1.831	**99055**
0.560	**0.566**	0.563	0.750	0.250	0.391	1.831	**99056**
0.589	**0.593**	0.591	0.750	0.197	0.354	1.862	**99059**
0.623	**0.627**	0.625	0.750	0.313	0.406	2.000	**99810** *
	0.627	0.625	0.750	0.313	0.406	2.000	**99062**
0.626	**0.630**	0.630	0.718	0.313	0.438	2.000	**99058**
0.667	**0.671**	0.669	0.875	0.315	0.433	2.000	**99068**
0.682	**0.686**	0.684	0.900	0.313	0.438	2.000	**99060**
0.704	**0.709**	0.709	0.962	0.315	0.433	1.811	**99082**
0.748	**0.752**	0.750	0.945	0.313	0.438	2.000	**99811** *
		0.750	0.945	0.313	0.438	2.000	**99076**
0.759	**0.761**	0.760	0.938	0.313	0.438	2.000	**99081**
0.780	**0.784**	0.781	0.935	0.313	0.438	2.000	**99080**
0.785	**0.789**	0.787	0.930	0.315	0.433	2.000	**99078**
0.812	**0.815**	0.813	1.188	0.375	0.563	3.000	**99083**
0.857	**0.861**	0.859	1.155	0.250	0.375	2.000	**99086**
0.861	**0.866**	0.866	1.188	0.259	0.359	1.856	**99084**
		0.866	1.188	0.315	0.472	1.812	**99085**
0.873	**0.877**	0.875	1.094	0.313	0.438	2.000	**99812** *
		0.875	1.094	0.313	0.438	2.000	**99087**
0.908	**0.912**	0.910	1.218	0.313	0.438	1.847	**99860** *
		0.910	1.218	0.313	0.438	1.847	**99091**
0.940	**0.945**	0.945	1.130	0.313	0.438	2.000	**99092**
0.966	**0.970**	0.969	1.130	0.313	0.438	2.000	**99094**
		0.969	1.130	0.625	0.719	2.000	**99096**

* Indicates SPEEDI-SLEEVE Gold

[1)] Possible max. distance of rear groove from shaft end when installation tool supplied with sleeve is used

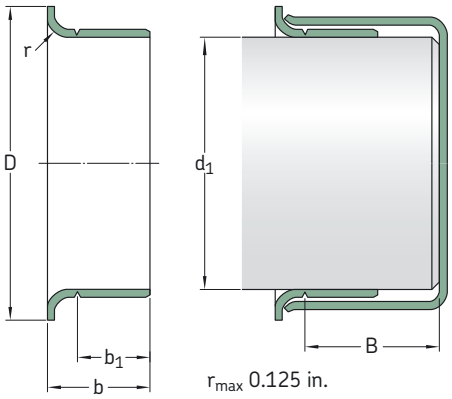

Shaft diameter range		Nominal dimensions					Designation
d_1		d_1	D ±0,063	b_1 ±0,031	b ±0,031	B[1)]	
min	max						
in.		in.					–
0.982	**0.986**	0.984	1.300	0.313	0.433	2.000	**99813** *
		0.984	1.300	0.313	0.433	2.000	**99098**
0.998	**1.002**	1.000	1.219	0.313	0.438	2.000	**99814** *
		1.000	1.219	0.313	0.438	2.000	**99100**
1.019	**1.024**	1.024	1.313	0.315	0.472	1.813	**99103**
1.060	**1.064**	1.063	1.320	0.313	0.438	1.843	**99815** *
		1.063	1.320	0.313	0.438	1.843	**99106**
1.087	**1.091**	1.089	1.406	0.313	0.438	0.625	**99108**
1.100	**1.104**	1.102	1.375	0.375	0.500	1.843	**99866** **
		1.102	1.375	0.375	0.500	1.843	**99111**
1.123	**1.127**	1.125	1.500	0.313	0.438	0.688	**99816** *
		1.125	1.500	0.313	0.438	0.688	**99112**
		1.125	1.500	0.375	0.500	0.688	**99116**
1.154	**1.158**	1.156	1.350	0.375	0.500	0.688	**99865** **
		1.156	1.350	0.375	0.500	0.688	**99120**
1.173	**1.178**	1.175	1.400	0.313	0.438	0.688	**99122**
1.179	**1.184**	1.181	1.400	0.315	0.433	0.688	**99114**
1.185	**1.190**	1.188	1.400	0.313	0.438	0.688	**99118**
1.216	**1.222**	1.219	1.563	0.313	0.433	0.625	**99123**
1.237	**1.243**	1.240	1.540	0.315	0.438	0.688	**99141**
1.247	**1.253**	1.250	1.500	0.313	0.438	0.688	**99817** *
		1.250	1.500	0.313	0.438	0.688	**99125**
1.257	**1.263**	1.260	1.500	0.315	0.438	0.688	**99128**
1.297	**1.301**	1.299	1.594	0.591	0.709	1.000	**99121**
1.308	**1.314**	1.313	1.600	0.250	0.375	0.813	**99129**
1.310	**1.316**	1.313	1.594	0.500	0.625	0.813	**99818** **
		1.313	1.594	0.500	0.625	0.813	**99131**
1.333	**1.339**	1.339	1.625	0.500	0.625	0.813	**99134**

* Indicates SPEEDI-SLEEVE Gold
** Indicates SPEEDI-SLEEVE Gold product – contact SKF for availability
[1)] Possible max. distance of rear groove from shaft end when installation tool supplied with sleeve is used

SPEEDI-SLEEVE – inch sizes

d_1 **1.371 – 1.971** in.

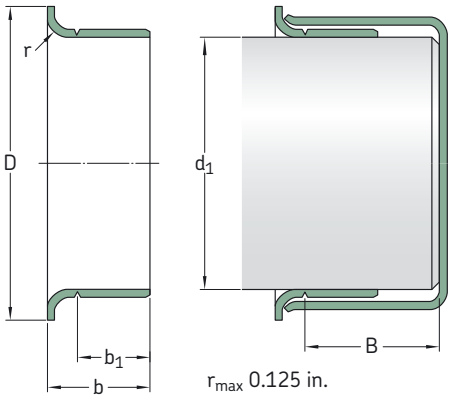

Shaft diameter range		Nominal dimensions					Designation
d_1		d_1	D	b_1	b	B[1]	
min	max		±0,063	±0,031	±0,031		
in.		in.					–
1.371	**1.377**	1.375	1.638	0.313	0.438	0.813	**99133**
		1.375	1.638	0.500	0.625	0.813	**99819** *
		1.375	1.638	0.500	0.625	0.813	**99138**
1.375	**1.381**	1.375	1.638	0.512	0.630	0.813	**99820** *
		1.375	1.638	0.512	0.630	0.813	**99139**
1.411	**1.417**	1.417	1.781	0.512	0.669	0.984	**99146**
1.432	**1.438**	1.438	1.781	0.563	0.688	1.016	**99821** *
		1.438	1.781	0.563	0.688	1.016	**99143**
1.435	**1.441**	1.438	1.781	0.375	0.500	1.016	**99144**
1.490	**1.496**	1.496	1.781	0.512	0.669	0.984	**99147**
1.497	**1.503**	1.500	1.781	0.375	0.500	1.016	**99823** *
		1.500	1.781	0.375	0.500	1.016	**99150**
		1.500	1.781	0.563	0.688	1.016	**99822** *
		1.500	1.781	0.563	0.688	1.016	**99149**
1.520	**1.526**	1.523	1.859	0.438	0.563	1.016	**99152**
1.549	**1.555**	1.552	1.859	0.438	0.563	1.016	**99155**
1.559	**1.565**	1.562	1.859	0.563	0.688	1.016	**99824** *
		1.562	1.859	0.563	0.688	1.016	**99156**
1.566	**1.572**	1.569	1.859	0.625	0.750	1.016	**99159**
1.569	**1.575**	1.575	1.850	0.390	0.509	1.000	**99153**
1.572	**1.578**	1.578	1.850	0.512	0.630	1.023	**99825** *
		1.578	1.850	0.512	0.630	1.023	**99157**
1.602	**1.608**	1.605	1.938	0.500	0.641	1.000	**99160**
1.608	**1.614**	1.614	1.938	0.500	0.625	1.016	**99163**
1.622	**1.628**	1.625	1.875	0.313	0.438	1.016	**99161**
		1.625	1.875	0.563	0.688	0.813	**99826** *
		1.625	1.875	0.563	0.688	0.813	**99162**
1.647	**1.654**	1.650	2.087	0.445	0.571	0.846	**99166**
		1.650	2.087	0.563	0.689	0.827	**99169**
		1.654	2.087	0.563	0.689	0.827	**99873** **
1.653	**1.659**	1.656	2.087	0.550	0.689	0.827	**99165**

* Indicates SPEEDI-SLEEVE Gold
** Indicates SPEEDI-SLEEVE Gold product – contact SKF for availability
[1] Possible max. distance of rear groove from shaft end when installation tool supplied with sleeve is used

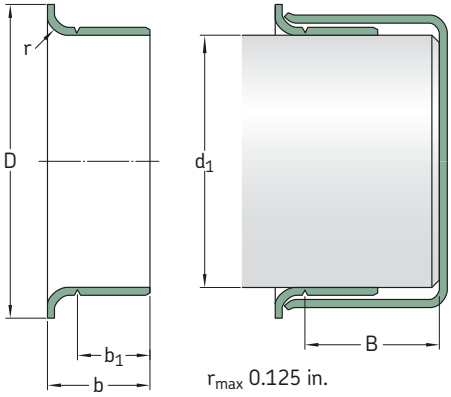

Shaft diameter range		Nominal dimensions					Designation
d_1		d_1	D ±0,063	b_1 ±0,031	b ±0,031	B[1)]	
min	max						
in.		in.					–
1.684	**1.690**	1.688	1.906	0.563	0.688	0.875	**99168**
1.685	**1.691**	1.688	1.906	0.313	0.438	0.875	**99167**
1.687	**1.693**	1.693	1.906	0.500	0.625	0.844	**99182**
1.715	**1.721**	1.719	2.031	0.563	0.688	0.813	**99171**
1.736	**1.742**	1.739	2.063	0.375	0.500	0.813	**99170**
1.747	**1.753**	1.750	2.055	0.375	0.500	0.813	**99172**
		1.750	2.063	0.531	0.625	0.878	**99180**
		1.750	2.063	0.563	0.688	0.813	**99827** *
		1.750	2.063	0.563	0.688	0.813	**99174**
		1.750	2.063	0.750	0.875	0.813	**99828** *
		1.750	2.063	0.750	0.875	0.813	**99175**
1.761	**1.767**	1.766	2.063	0.563	0.688	0.813	**99829** *
		1.766	2.063	0.563	0.688	0.813	**99176**
1.769	**1.775**	1.772	2.087	0.551	0.669	0.812	**99830** *
		1.772	2.087	0.551	0.669	0.812	**99177**
1.778	**1.784**	1.781	2.125	0.667	0.800	1.062	**99179**
1.809	**1.815**	1.813	2.090	0.563	0.688	1.000	**99831** **
		1.813	2.090	0.563	0.688	1.000	**99181**
1.857	**1.863**	1.859	2.156	0.563	0.688	1.000	**99185**
1.866	**1.872**	1.868	2.188	0.889	1.025	1.000	**99186**
1.872	**1.878**	1.875	2.203	0.175	0.295	0.744	**99190**
		1.875	2.203	0.295	0.415	0.744	**99188**
		1.875	2.203	0.375	0.516	1.050	**99184**
		1.875	2.203	0.563	0.688	1.000	**99832** *
		1.875	2.203	0.563	0.688	1.000	**99187**
1.887	**1.893**	1.891	2.205	0.551	0.668	0.984	**99189**
1.909	**1.915**	1.912	2.219	0.375	0.500	1.000	**99192**
1.934	**1.940**	1.938	2.219	0.563	0.688	1.000	**99833** *
		1.938	2.219	0.563	0.688	1.000	**99193**
1.965	**1.971**	1.969	2.244	0.551	0.668	0.984	**99196**

* Indicates SPEEDI-SLEEVE Gold
** Indicates SPEEDI-SLEEVE Gold product – contact SKF for availability
[1)] Possible max. distance of rear groove from shaft end when installation tool supplied with sleeve is used

SPEEDI-SLEEVE – inch sizes

d_1 **1.997 – 2.753** in.

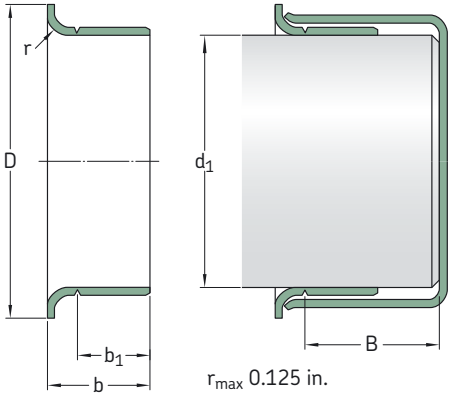

Shaft diameter range		Nominal dimensions					Designation
d_1		d_1	D ±0,063	b_1 ±0,031	b ±0,031	B[1]	
min	max						
in.		in.					–
1.977	**1.983**	1.980	2.313	0.563	0.704	1.050	**99198**
	2.003	2.000	2.406	0.563	0.688	1.006	**99834** *
		2.000	2.406	0.563	0.688	1.000	**99199**
		2.000	2.406	0.875	1.000	1.000	**99835** *
		2.000	2.406	0.875	1.000	1.000	**99200**
2.040	**2.047**	2.047	2.469	0.500	0.625	1.359	**99204**
2.057	**2.063**	2.063	2.469	0.781	0.938	1.375	**99205**
2.123	**2.128**	2.125	2.422	0.500	0.750	1.281	**99210**
2.124	**2.130**	2.125	2.422	0.781	0.938	1.375	**99836** *
		2.125	2.422	0.781	0.938	1.375	**99212**
2.162	**2.168**	2.165	2.441	0.787	0.905	1.250	**99863** *
		2.165	2.441	0.787	0.905	1.250	**99215**
2.186	**2.192**	2.188	2.500	0.781	0.938	1.313	**99218**
2.198	**2.205**	2.205	2.531	0.500	0.625	1.313	**99220**
		2.205	2.531	0.779	0.936	3.150	**99224**
2.227	**2.233**	2.230	2.531	0.500	0.625	1.313	**99861** **
		2.230	2.531	0.500	0.625	1.313	**99229**
		2.230	2.531	0.781	0.906	1.250	**99230**
2.237	**2.243**	2.240	2.563	0.764	0.900	1.250	**99226**
2.249	**2.255**	2.250	2.531	0.313	0.438	1.313	**99838** **
		2.250	2.531	0.313	0.438	1.313	**99227**
		2.250	2.531	0.781	0.938	1.313	**99837** *
		2.250	2.531	0.781	0.938	1.313	**99225**
2.280	**2.286**	2.283	2.598	0.787	0.938	1.375	**99219**
2.309	**2.315**	2.313	2.688	0.781	0.938	1.375	**99231**
2.327	**2.333**	2.328	2.750	0.750	0.875	1.500	**99233**
2.359	**2.365**	2.362	2.785	0.370	0.450	1.471	**99241**
		2.362	2.785	0.787	0.905	1.375	**99869** **
		2.362	2.785	0.787	0.905	1.375	**99235**
2.372	**2.378**	2.375	2.750	0.594	0.750	1.375	**99238**

* Indicates SPEEDI-SLEEVE Gold
** Indicates SPEEDI-SLEEVE Gold product – contact SKF for availability
[1] Possible max. distance of rear groove from shaft end when installation tool supplied with sleeve is used

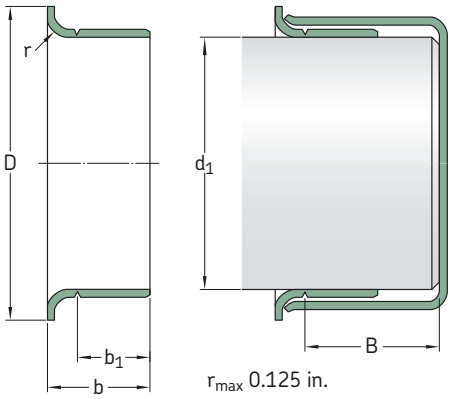

Shaft diameter range		Nominal dimensions					Designation
d_1		d_1	D ±0,063	b_1 ±0,031	b ±0,031	B[1)]	
min	max						
in.		in.					–
2.374	**2.380**	2.375	2.750	0.526	0.683	1.375	**99240**
		2.375	2.750	0.781	0.938	1.375	**99839** *
		2.375	2.750	0.781	0.938	1.375	**99237**
2.434	**2.440**	2.438	2.828	0.781	0.938	1.393	**99243**
	2.441	2.441	2.828	0.500	0.625	1.425	**99244**
2.435	**2.441**	2.438	2.828	0.500	0.625	1.425	**99242**
2.489	**2.495**	2.492	2.875	0.781	0.938	1.393	**99249**
2.497	**2.503**	2.500	2.820	0.555	0.650	0.890	**99253**
2.500	**2.506**	2.500	2.828	0.500	0.656	1.393	**99248**
		2.500	2.820	0.781	0.938	1.375	**99840** *
		2.500	2.820	0.781	0.938	1.375	**99250**
2.510	**2.516**	2.516	2.828	0.781	0.906	1.438	**99251**
2.556	**2.562**	2.559	2.850	0.787	0.905	1.375	**99841** *
		2.559	2.850	0.787	0.905	1.375	**99254**
2.560	**2.566**	2.563	2.891	0.781	0.938	1.375	**99256**
2.595	**2.601**	2.598	2.990	0.781	0.938	1.250	**99259**
2.618	**2.624**	2.621	3.047	0.781	0.938	1.375	**99261**
2.621	**2.627**	2.625	3.047	0.781	0.906	1.375	**99264**
2.622	**2.628**	2.625	3.047	0.500	0.625	1.375	**99260**
2.625	**2.631**	2.625	3.047	0.781	0.938	1.375	**99842** *
		2.625	3.047	0.781	0.938	1.375	**99262**
2.670	**2.677**	2.677	3.125	0.750	0.875	1.688	**99266**
2.727	**2.733**	2.730	3.125	0.781	0.906	1.313	**99268**
2.740	**2.746**	2.743	3.065	0.781	0.938	1.250	**99273**
2.745	**2.751**	2.750	3.125	0.781	0.938	1.250	**99843** *
		2.750	3.125	0.781	0.938	1.250	**99274**
2.747	**2.753**	2.750	3.075	1.438	1.625	1.625	**99267**

* Indicates SPEEDI-SLEEVE Gold
[1)] Possible max. distance of rear groove from shaft end when installation tool supplied with sleeve is used

SPEEDI-SLEEVE – inch sizes

d_1 **2.750 – 3.624** in.

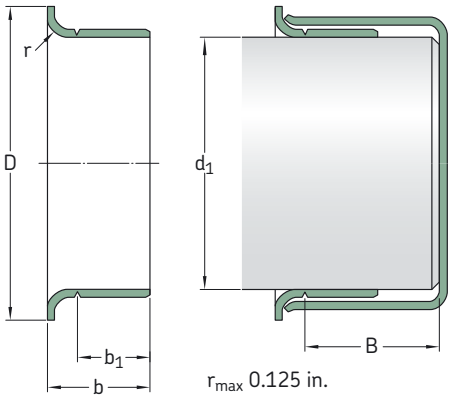

Shaft diameter range		Nominal dimensions					Designation
d_1		d_1	D ±0,063	b_1 ±0,031	b ±0,031	B[1]	
min	max						
in.		in.					–
2.750	**2.756**	2.750	3.125	0.406	0.563	1.250	**99272**
		2.750	3.125	0.781	0.938	1.250	**99844** *
		2.750	3.125	0.781	0.938	1.250	**99275**
		2.750	3.125	1.125	1.250	1.312	**99269**
2.753	**2.759**	2.756	3.125	0.787	0.945	1.250	**99276**
2.809	**2.815**	2.813	3.188	0.594	0.688	1.250	**99281**
2.828	**2.835**	2.835	3.225	0.750	0.875	1.343	**99870** **
		2.835	3.225	0.750	0.875	1.343	**99284**
2.838	**2.844**	2.838	3.225	0.500	0.656	1.250	**99845** *
		2.838	3.225	0.500	0.656	1.250	**99282**
2.866	**2.872**	2.869	3.188	0.781	0.938	1.250	**99286**
2.873	**2.879**	2.875	3.219	0.781	0.938	1.250	**99846** *
		2.875	3.219	0.781	0.938	1.250	**99287**
2.937	**2.943**	2.938	3.344	0.500	0.641	1.331	**99290**
		2.938	3.344	0.781	0.938	1.313	**99847** *
		2.940	3.344	0.781	0.938	1.313	**99293**
2.950	**2.956**	2.953	3.273	0.594	0.690	1.083	**99289**
		2.953	3.305	0.866	1.024	1.313	**99875** **
		2.953	3.305	0.866	1.024	1.313	**99294**
2.972	**2.976**	2.974	3.235	0.813	1.000	1.250	**99292**
2.990	**2.996**	2.993	3.359	0.484	0.625	1.331	**99291**
		2.993	3.359	0.563	0.688	1.375	**99298**
		2.993	3.350	0.813	1.000	1.281	**99299**
2.997	**3.003**	3.000	3.240	0.813	0.938	1.375	**99296**
3.000	**3.006**	3.000	3.345	0.625	0.813	1.280	**99303**
		3.000	3.235	0.813	1.000	1.281	**99848** *
		3.000	3.235	0.813	1.000	1.281	**99300**
3.008	**3.014**	3.011	3.355	0.500	0.625	2.000	**99301**
3.064	**3.071**	3.071	3.468	0.750	0.875	2.056	**99306**
3.120	**3.126**	3.125	3.531	0.688	0.813	2.000	**99311**
		3.125	3.531	0.813	1.000	2.000	**99849** *
		3.125	3.531	0.813	1.000	2.000	**99312**

* Indicates SPEEDI-SLEEVE Gold
** Indicates SPEEDI-SLEEVE Gold product – contact SKF for availability
[1] Possible max. distance of rear groove from shaft end when installation tool supplied with sleeve is used

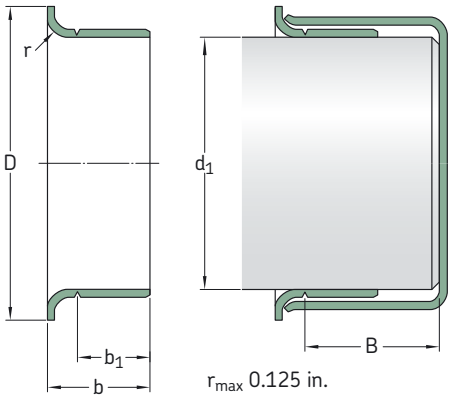

Shaft diameter range		Nominal dimensions					Designation
d_1		d_1	D ±0,063	b_1 ±0,031	b ±0,031	$B^{1)}$	
min	max						
in.		in.					–
3.124	**3.132**	3.125	3.525	0.551	0.709	2.031	**99307**
3.142	**3.150**	3.150	3.540	0.750	0.886	1.375	**99313**
3.146	**3.153**	3.150	3.543	0.433	0.591	1.375	**99317**
		3.150	3.543	0.827	0.945	1.375	**99315**
3.225	**3.231**	3.228	3.585	0.660	0.848	1.750	**99328**
3.247	**3.253**	3.250	3.594	0.813	1.000	1.375	**99322**
3.250	**3.256**	3.250	3.575	0.595	0.719	1.375	**99850** *
		3.250	3.575	0.595	0.719	1.375	**99324**
		3.250	3.585	0.688	0.875	1.250	**99326**
		3.250	3.585	0.813	1.000	1.375	**99851** *
		3.250	3.585	0.813	1.000	1.375	**99325**
3.307	**3.313**	3.310	3.688	0.813	1.000	1.375	**99331**
3.337	**3.347**	3.342	3.700	0.669	0.827	1.378	**99332**
		3.342	3.700	0.827	0.984	1.378	**99333**
		3.346	3.700	0.827	0.984	1.378	**99872** *
3.338	**3.346**	3.346	3.580	0.399	0.499	1.431	**99334**
3.373	**3.379**	3.375	3.688	0.375	0.500	1.410	**99338**
		3.375	3.695	0.813	1.000	1.375	**99337**
3.435	**3.441**	3.438	3.844	0.781	0.906	1.406	**99339**
3.477	**3.483**	3.480	3.835	0.781	0.906	1.406	**99340**
3.497	**3.503**	3.500	3.844	0.625	0.813	1.347	**99346**
3.500	**3.506**	3.500	3.825	0.313	0.500	1.347	**99347**
		3.500	3.844	0.813	1.000	1.347	**99852** *
		3.500	3.844	0.813	1.000	1.347	**99350**
3.501	**3.507**	3.504	3.844	0.625	0.813	1.348	**99349**
3.540	**3.546**	3.543	4.000	0.438	0.538	1.813	**99352**
		3.543	4.000	0.526	0.667	1.750	**99353**
		3.543	4.000	0.710	0.906	1.813	**99351**
		3.543	4.000	0.906	1.102	1.750	**99354**
3.560	**3.566**	3.563	3.900	0.813	1.000	1.750	**99356**
3.618	**3.624**	3.621	4.031	0.813	1.000	1.750	**99360**

* Indicates SPEEDI-SLEEVE Gold
[1)] Possible max. distance of rear groove from shaft end when installation tool supplied with sleeve is used

SPEEDI-SLEEVE – inch sizes

d_1 **3.623 – 5.379** in.

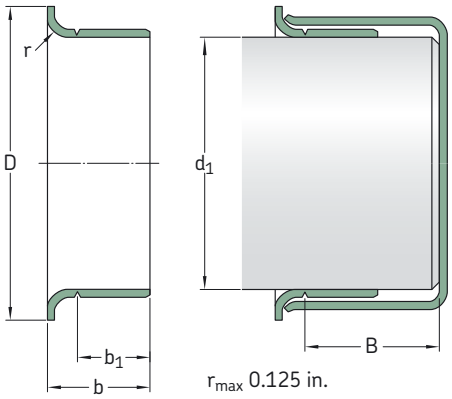

Shaft diameter range		Nominal dimensions					Designation
d_1		d_1	D	b_1	b	B[1]	
min	max		±0,063	±0,031	±0,031		
in.		in.					–
3.623	**3.629**	3.625	4.025	0.500	0.625	1.750	**99363**
		3.625	4.031	0.813	1.000	1.750	**99362**
3.684	**3.690**	3.688	4.031	0.313	0.438	0.875	**99368**
3.685	**3.691**	3.688	4.025	0.813	0.938	1.800	**99365**
3.727	**3.733**	3.730	4.016	0.469	0.594	1.800	**99359**
		3.730	4.025	0.781	0.906	1.800	**99366**
3.737	**3.743**	3.740	4.025	0.827	0.945	1.800	**99369**
3.740	**3.746**	3.743	4.031	0.344	0.500	1.800	**99374**
		3.743	4.035	0.469	0.594	1.800	**99364**
3.746	**3.752**	3.749	4.025	0.563	0.688	1.800	**99376**
3.750	**3.756**	3.753	4.025	0.344	0.500	1.800	**99367**
		3.750	4.020	0.688	0.875	1.800	**99853** *
		3.753	4.020	0.688	0.875	1.800	**99372**
3.868	**3.874**	3.871	4.185	0.813	1.000	1.875	**99386**
3.873	**3.879**	3.875	4.219	0.813	1.000	1.875	**99387**
3.935	**3.941**	3.938	4.313	0.813	1.000	2.050	**99854** *
		3.938	4.313	0.813	1.000	2.050	**99393**
3.998	**4.006**	4.000	4.375	0.500	0.625	2.066	**99401**
		4.000	4.375	0.600	0.725	2.050	**99395**
		4.000	4.375	0.650	0.775	1.375	**99400**
		4.000	4.375	0.813	1.000	2.050	**99855** *
		4.000	4.375	0.813	1.000	2.050	**99399**
4.090	**4.098**	4.094	4.438	0.787	0.945	1.417	**99409**
4.122	**4.130**	4.125	4.470	0.813	1.000	1.375	**99412**
4.130	**4.138**	4.134	4.470	0.787	0.913	1.378	**99413**
4.183	**4.191**	4.188	4.500	0.813	1.000	1.375	**99418**
4.226	**4.234**	4.234	4.610	0.781	0.906	1.438	**99423**
4.248	**4.256**	4.250	4.610	0.813	1.000	1.438	**99424**
4.322	**4.331**	4.331	4.921	0.448	0.589	1.297	**99434**
4.327	**4.335**	4.328	4.921	0.509	0.650	1.250	**99435**

* Indicates SPEEDI-SLEEVE Gold

[1] Possible max. distance of rear groove from shaft end when installation tool supplied with sleeve is used

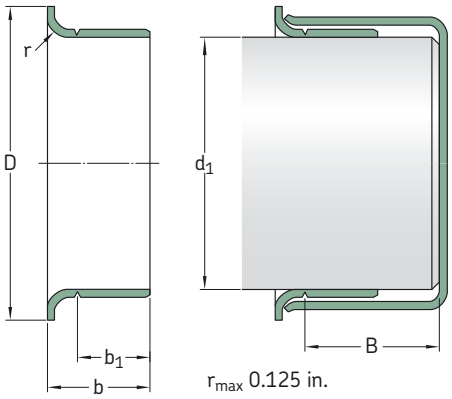

Shaft diameter range		Nominal dimensions					Designation
d_1		d_1	D ±0,063	b_1 ±0,031	b ±0,031	B[1)]	
min	max						
in.		in.					–
4.370	**4.378**	4.375	4.750	0.813	1.000	1.650	**99437**
4.401	**4.409**	4.409	4.750	0.750	0.886	1.300	**99438**
4.434	**4.442**	4.438	4.813	1.000	1.142	1.313	**99439**
4.496	**4.504**	4.500	4.900	0.813	1.000	1.250	**99856** *
		4.500	4.850	0.813	1.000	1.250	**99450**
4.523	**4.531**	4.528	5.000	0.813	0.938	1.250	**99452**
4.621	**4.629**	4.625	5.000	0.438	0.625	1.375	**99465**
		4.625	5.063	1.000	1.250	1.375	**99463**
4.685	**4.693**	4.688	5.063	0.813	1.000	1.375	**99468**
4.720	**4.728**	4.724	5.110	0.315	0.433	1.323	**99471**
		4.724	5.110	0.787	0.984	1.260	**99473**
4.746	**4.754**	4.750	5.000	0.500	0.750	1.500	**99475**
4.799	**4.807**	4.803	5.177	0.787	0.945	1.260	**99472**
4.839	**4.847**	4.843	5.229	0.787	0.984	1.244	**99484**
4.871	**4.879**	4.875	5.250	0.625	0.750	1.438	**99487**
4.917	**4.925**	4.921	5.400	0.394	0.551	1.438	**99490**
		4.921	5.400	1.024	1.260	1.438	**99492**
4.998	**5.006**	5.000	5.400	0.540	0.681	1.438	**99501**
		5.000	5.400	0.688	0.875	1.438	**99857** *
		5.000	5.400	0.688	0.875	1.438	**99498**
		5.000	5.390	0.813	1.000	1.438	**99858** *
		5.000	5.390	0.813	1.000	1.438	**99499**
5.110	**5.118**	5.114	5.493	0.750	0.938	1.181	**99494**
5.117	**5.125**	5.118	5.493	0.866	0.996	1.280	**99874** **
		5.125	5.493	0.866	0.996	1.280	**99491**
5.120	**5.128**	5.125	5.500	0.813	1.000	1.250	**99513**
5.246	**5.254**	5.250	5.560	0.813	1.000	1.250	**99525**
5.307	**5.315**	5.311	5.735	0.807	1.000	1.250	**99533**
5.371	**5.379**	5.375	5.875	0.813	1.000	1.250	**99537**

* Indicates SPEEDI-SLEEVE Gold
** Indicates SPEEDI-SLEEVE Gold product – contact SKF for availability
[1)] Possible max. distance of rear groove from shaft end when installation tool supplied with sleeve is used

SPEEDI-SLEEVE – inch sizes

d_1 **5.434 – 8.005** in.

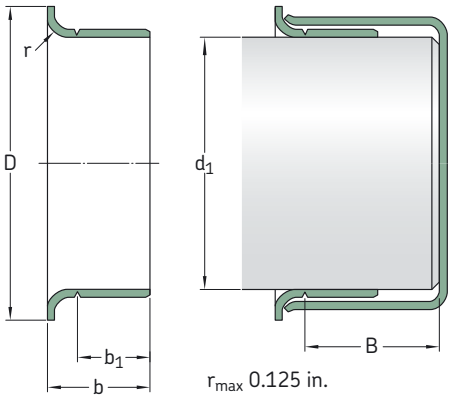

Shaft diameter range		Nominal dimensions					Designation
d_1		d_1	D ±0,063	b_1 ±0,031	b ±0,031	B[1]	
min	max						
in.		in.					
5.434	**5.442**	5.438	5.750	1.500	1.688	1.875	**99548**
5.472	**5.480**	5.476	5.900	0.563	0.750	1.234	**99547**
5.498	**5.506**	5.500	5.938	0.518	0.705	1.250	**99550**
		5.500	5.938	0.813	1.000	1.250	**99859** **
		5.500	5.938	0.813	1.000	1.250	**99549**
5.508	**5.516**	5.512	5.945	0.807	1.000	1.250	**99552**
5.621	**5.629**	5.625	6.188	0.875	1.000	1.812	**99560**
5.699	**5.709**	5.709	6.100	0.750	0.875	1.812	**99571**
5.726	**5.734**	5.734	6.100	0.563	0.750	1.938	**99562**
5.746	**5.754**	5.750	6.180	0.813	1.000	1.750	**99575**
5.871	**5.879**	5.875	6.188	1.000	1.250	1.313	**99862** *
		5.875	6.188	1.000	1.250	1.313	**99587**
5.896	**5.906**	5.905	6.260	1.024	1.181	1.280	**99595**
5.934	**5.942**	5.938	6.375	1.000	1.125	1.875	**99596**
5.995	**6.003**	6.000	6.360	0.500	0.750	1.750	**99601**
		6.000	6.375	1.000	1.250	1.750	**99599**
6.058	**6.068**	6.063	6.375	1.024	1.181	1.299	**99605**
6.092	**6.102**	6.097	6.575	1.024	1.181	1.299	**99606**
6.198	**6.208**	6.203	6.625	0.813	1.063	1.750	**99620**
6.245	**6.255**	6.250	6.625	1.031	1.250	1.750	**99625**
6.289	**6.299**	6.299	6.750	1.000	1.250	1.375	**99630**
6.495	**6.505**	6.500	7.000	1.000	1.250	1.375	**99650**
6.683	**6.693**	6.688	7.188	1.250	1.496	1.750	**99640**
6.745	**6.755**	6.750	7.125	0.813	1.063	1.750	**99675**
6.880	**6.890**	6.890	7.362	1.102	1.260	1.378	**99687**

* Indicates SPEEDI-SLEEVE Gold
** Indicates SPEEDI-SLEEVE Gold product – contact SKF for availability
[1] Possible max. distance of rear groove from shaft end when installation tool supplied with sleeve is used

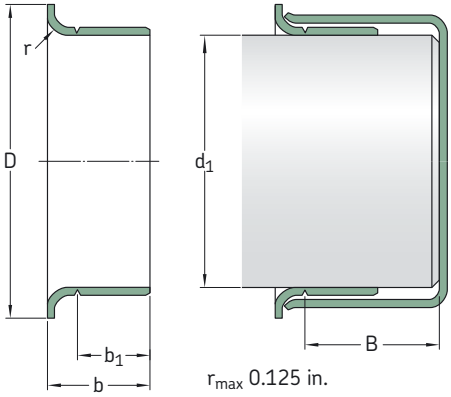

Shaft diameter range		Nominal dimensions					Designation
d_1		d_1	D ±0,063	b_1 ±0,031	b ±0,031	$B^{1)}$	
min	max						
in.		in.					–
6.995	**7.005**	7.000	7.475	1.000	1.250	1.688	**99864** **
		7.000	7.475	1.000	1.250	1.688	**99700**
7.077	**7.087**	7.087	7.500	1.299	1.496	1.752	**99721**
7.244	**7.254**	7.250	7.760	1.250	1.500	2.175	**99725**
7.273	**7.283**	7.278	7.760	1.260	1.496	2.165	**99726**
7.444	**7.454**	7.453	7.860	0.813	1.000	1.250	**99745**
7.495	**7.505**	7.500	7.875	0.813	1.000	1.250	**99750**
7.745	**7.755**	7.750	8.270	1.000	1.313	1.875	**99775**
7.869	**7.879**	7.875	8.375	1.359	1.500	1.750	**99787**
7.933	**7.943**	7.938	8.375	1.000	1.250	1.750	**99799**
7.995	**8.005**	8.000	8.375	1.000	1.250	1.750	**99800**

** Indicates SPEEDI-SLEEVE Gold product – contact SKF for availability
[1)] Possible max. distance of rear groove from shaft end when installation tool supplied with sleeve is used

Large diameter wear sleeves

Outside contamination particles and polishing friction between a rotating shaft and a seal, over time, result in severe shaft damage. Instead of then repairing or replacing the shaft, SKF recommends the use of large diameter wear sleeves (LDSLV) primarily in applications where no SPEEDI-SLEEVE is available, i.e. for shaft sizes in the diameter range 211,15 to 1 143 mm (8.313 to 45 in). SKF LDSLV are made to order to fit shaft sizes within the ranges stated in **table 1** and **2**. A selection of possible sizes are listed in the product tables starting on **page 34**.

The use of LDSLV is recommended in applications where the operating conditions for the seals are difficult, particularly where solid contaminants can reach the seals, e.g. in rolling mills, primary metal plants and in chemical and mineral plants.

In applications where seal wear and shaft damage can be expected, it is recommended that the large diameter wear sleeves are installed into the application already from the outset. It will then not be necessary to rework the shaft before installing a replacement sleeve and the original seal size can be used as the replacement.

Table 1

Possible sleeve diameters and widths of LDSLV3

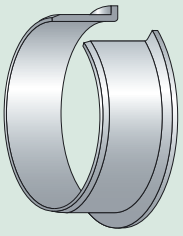

Shaft range over	incl.	**Width**[1] min.	max.
in. (*mm*)			
8.313 *211,5*	29.000 *736,6*	0.688 *17,5*	2.500 *63,5*
30.000 *762*	45.000 *1 143*	1.000 *25,4*	2.500 *63,5*

[1] Overall, 38,1 to 50,8 mm (*1.5* to *2 in.*) at 1 143 mm (*45 in.*) shaft diameter

Table 2

Possible sleeve diameters and widths of LDSLV4

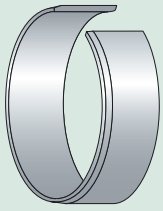

Shaft range over	incl.	**Width**[2] min.	max.
in. (*mm*)			
8.313 *211,5*	29.000 *736,6*	0.500 *12,7*	2.500 *63,5*
30.000 *762*	45.000 *1 143*	0.750 *19,05*	2.500 *63,5*

[2] Overall, 38,1 to 50,8 mm (*1.5* to *2 in.*) at 1 143 mm (*45 in.*) shaft diameter

LDSLV designs and features

There are two designs of SKF large diameter wear sleeves; type LDSLV3 with a flange (→ **fig. 1**) and type LDSLV4 without a flange (→ **fig. 2**). Both types are made of high quality SAE 1008 carbon steel and chrome plated to enhance the wear and corrosion resistance. The sleeve outside diameter is specially ground to provide a precision counter surface for the seal. The wall thickness of the standard sleeves is 2,39 mm (0.094 in.). Other sleeve materials can be provided to meet the demands of a specific application.

Type LDSLV3 is designed with a flange to simplify final positioning of the sleeve. The width of the counterface for the seal is 6,35 mm (0.250 in.) narrower than the total width of the sleeve. The flange adds a nominal 25,4 mm (1.000 in.) over the shaft diameter. The flange height is 12,7 mm (0.500 in.) for all sizes. Note that force should never be applied directly to the flange when installing type LDSLV3.

Type LDSLV4 has the same features as type LDSLV3 but without a flange. LDSLV4 is intended for applications where a flange could interfere with other components during installation, or where a wider contact surface for the seal is required.

Using LDSLV designs

There are two alternative ways of using SKF large diameter wear sleeves (→ **fig. 3**);

1. The sleeve is positioned on the shaft until it covers the damaged part and a new seal, designed for a 4,78 mm (0.188 in.) larger shaft is used.
2. The shaft is machined down 4,78 mm (0.188 in.), the sleeve is installed and the original seal size is used.

The reworked shaft surface for the sleeve should have a surface roughness of between R_a 2,5 and 3,2 µm (100 to 125 µin.)

IMPORTANT: The shaft tolerances for large diameter wear sleeves, due to their heated slip-fit installation, are different from those for radial shaft seals. Contact SKF for assistance if the sleeves are to be used in systems with sustained temperatures higher than 75 °C (170 °F) and surface speeds in excess of 20 m/s (3 950 ft./min.).

Installation

SKF large diameter wear sleeves are designed for a heated slip-fit installation and must therefore be uniformly heated prior to installation on the shaft. The sleeve temperature should be approximately 180 °C (350 °F). Under no circumstances should the sleeve be heated to above 200 °C (400 °F). Any of the heating techniques normally used for bearings is suitable, e.g. heating cabinets, oil baths or induction heaters.

The sleeves should be installed immediately after heating since they cool rapidly and could seize on the shaft before the correct position is achieved. Repositioning of the sleeves by impacts from hammers, etc. should be avoided or minimized and care taken not to damage the ground outside diameter or lead-in-chamfer.

Removal

To remove large diameter wear sleeves it is recommended first to either heat them or to expand them by light hammer blows. The flange of type LDSLV3 should first be cut through at one point, using care not to damage the shaft surface.

Fig. 1

LDSLV3

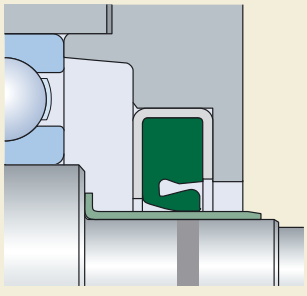

Fig. 2

LDSLV4

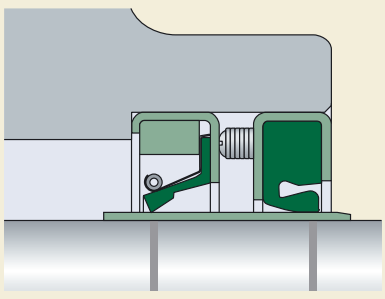

Fig. 3

Using LDSLV designs

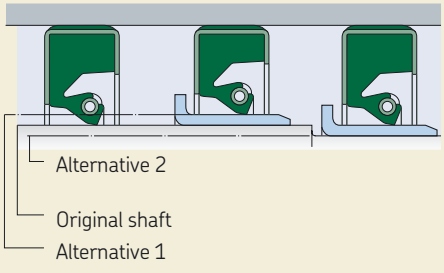

Wear sleeves, series LDSLV – metric sizes

d_1 **205.23 – 1 100,23** mm

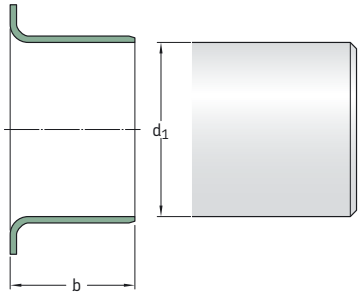

LDSLV3

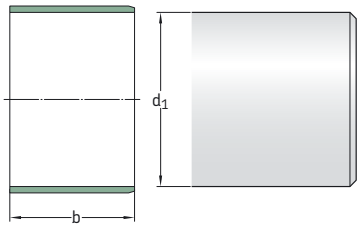

LDSLV4

Shaft diameter d_1	Sleeve width b	For nominal seal inside diameter	Design	Designation
mm		mm	–	–
205,23	33	210	LDSLV4	**90812**
	40	210	LDSLV4	**90813**
215	25,4	220	LDSLV3	**90179**
215,2	35	220	LDSLV3	**87831**
220	25	225	LDSLV3	**90806**
	40	225	LDSLV3	**87914**
	50,8	225	LDSLV3	**87915**
235,23	18	240	LDSLV4	**90952**
240	17,5	250	LDSLV3	**90156**
240,21	44	245	LDSLV4	**87911**
245,2	63,5	250	LDSLV3	**90766**
275	22	280	LDSLV4	**90546**
280	45	285	LDSLV4	**90437**
285,22	63,5	290	LDSLV4	**90238**
295,2	32	300	LDSLV3	**90114**
315,19	63,5	320	LDSLV4	**90155**
320	63,5	325	LDSLV4	**90198**
325,22	63,5	330	LDSLV4	**90239**
335,22	39	340	LDSLV4	**90777**
	50	340	LDSLV4	**90792**
335,22	18	340	LDSLV4	**87901**
	50	340	LDSLV4	**90801**
340	50	345	LDSLV3	**90113**
355,2	25,4	360	LDSLV4	**90778**
	50	360	LDSLV4	**90785**
360	44	365	LDSLV4	**87500**
360,22	45	365	LDSLV4	**90788**
365,2	20	370	LDSLV4	**87531**

Shaft diameter d_1	Sleeve width b	For nominal seal inside diameter	Design	Designation
mm		mm	–	–
395,22	63,5	400	LDSLV4	**87461**
405,23	50	410	LDSLV4	**90042**
419,99	63,5	425	LDSLV3	**97064**
435,2	63,5	440	LDSLV4	**87916**
455	30	460	LDSLV4	**90347**
	30	460	LDSLV4	**90765**
455,2	50	460	LDSLV4	**87504**
475,18	20	480	LDSLV4	**87921**
494,44	24	500	LDSLV4	**90259**
495,2	30	500	LDSLV4	**87503**
503,25	24	508	LDSLV4	**90149**
530	20	535	LDSLV4	**87783**
535,23	63	540	LDSLV4	**90802**
555,2	63,5	560	LDSLV4	**90075**
575,23	63,5	580	LDSLV4	**90951**
585,22	54,99	590	LDSLV4	**90292**
595,2	58,17	600	LDSLV3	**90120**
	63,5	600	LDSLV4	**89997**
595,22	50	600	LDSLV3	**90241**
645,2	64	650	LDSLV4	**90004**
645,24	63,5	650	LDSLV3	**87817**
665,2	45	670	LDSLV4	**90799**
685,22	63,5	960	LDSLV4	**90953**
714,81	50	720	LDSLV4	**87820**
735,23	63	740	LDSLV4	**89949**
755,19	63,5	760	LDSLV3	**87981**

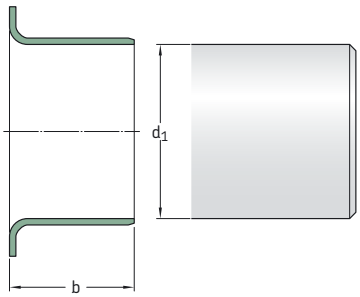

LDSLV3

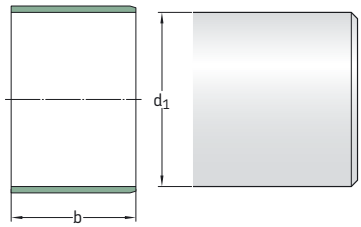

LDSLV4

Shaft diameter d_1	**Sleeve width** b	**For nominal seal inside diameter**	**Design**	**Designation**
mm		mm	–	–
865,23	63,5	870	LDSLV4	**90221**
875,18	63,5	880	LDSLV4	**90103**
1 015,20	25	1 020	LDSLV4	**90786**
1 049,33	60	1 054	LDSLV4	**89947**
1 100,23	63	1 105	LDSLV4	**89946**

Wear sleeves, series LDSLV – inch sizes

d_1 **7.813 – 11.812** in.

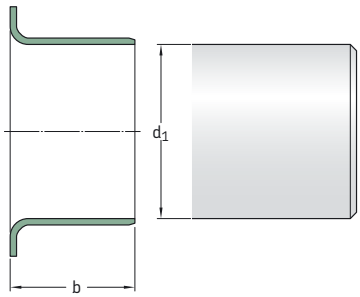

LDSLV3

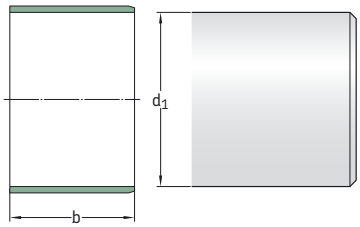

LDSLV4

Shaft diameter d_1	Sleeve width b	Design	For nominal seal inside diameter	Designation
in./*mm*		–	in./*mm*	–
7.813 *198,45*	2.250 *57,15*	LDSLV4	8.000 *203,20*	**CR 85106**
8.000 *203,20*	1.500 *38,10*	LDSLV4	8.188 *207,98*	**CR 87577**
8.313 *211,15*	1.250 *31,75*	LDSLV4	8.500 *215,90*	**CR 85885**
8.353 *212,17*	1.500 *38,10*	LDSLV4	8.541 *216,94*	**CR 86907**
8.500 *215,90*	1.000 *25,40*	LDSLV3	8.688 *220,68*	**CR 85158**
8.625 *219,08*	2.750 *69,85*	LDSLV3	8.813 *223,85*	**CR 85643**
8.661 *220,00*	1.000 *25,40*	LDSLV4	8.849 *224,76*	**CR 87319**
8.687 *220,65*	2.250 *57,15*	LDSLV3	8.875 *225,43*	**CR 86543**
8.750 *222,25*	1.500 *38,10*	LDSLV3	8.938 *227,03*	**CR 87196**
8.812 *223,82*	2.000 *50,80*	LDSLV4	9.000 *228,60*	**CR 86551**
8.813 *223,85*	1.000 *25,40*	LDSLV3	9.000 *228,60*	**CR 85688**
8.866 *225,19*	2.500 *63,50*	LDSLV4	9.054 *229,97*	**CR 87166**
8.867 *225,22*	1.000 *25,40*	LDSLV4	9.055 *230,00*	**CR 87462**
8.875 *225,43*	1.250 *31,75*	LDSLV3	9.063 *230,20*	**CR 85973**
8.875 *225,43*	1.250 *31,75*	LDSLV4	9.063 *230,20*	**CR 87526**
8.938 *227,03*	2.500 *63,50*	LDSLV4	9.126 *231,80*	**CR 86546**
9.000 *228,60*	1.000 *25,40*	LDSLV3	9.188 *233,38*	**CR 87555**

Shaft diameter d_1	Sleeve width b	Design	For nominal seal inside diameter	Designation
in./*mm*		–	in./*mm*	–
9.055 *230,00*	1.000 *25,40*	LDSLV3	9.243 *234,77*	**CR 89943**
9.063 *230,20*	1.500 *38,10*	LDSLV4	9.250 *234,95*	**CR 85931**
9.125 *231,78*	1.000 *25,40*	LDSLV4	9.313 *236,55*	**CR 86547**
	1.500 *38,10*	LDSLV4	9.313 *236,55*	**CR 90130**
9.250 *234,95*	0.875 *22,23*	LDSLV4	9.438 *239,73*	**CR 84643**
9.260 *235,20*	1.102 *28,00*	LDSLV4	9.448 *239,98*	**CR 87789**
9.313 *236,55*	1.500 *38,10*	LDSLV3	9.500 *241,30*	**CR 85377**
9.449 *240,01*	1.181 *30,00*	LDSLV4	9.637 *244,78*	**CR 87144**
9.500 *241,30*	2.500 *63,50*	LDSLV4	9.688 *246,08*	**CR 86562**
9.500 *241,30*	1.000 *25,40*	LDSLV3	9.688 *246,08*	**CR 86633**
9.563 *242,90*	1.000 *25,40*	LDSLV4	9.750 *247,65*	**CR 85073**
	2.000 *50,80*	LDSLV4	9.750 *247,65*	**CR 85397**
9.750 *247,65*	1.438 *36,53*	LDSLV4	9.938 *252,43*	**CR 84965**
9.750 *252,43*	2.250 *57,15*	LDSLV4	9.938 *252,43*	**CR 85045**
9.813 *249,24*	2.000 *50,80*	LDSLV3	10.000 *254,00*	**CR 84156**
	1.125 *28,58*	LDSLV4	10.000 *254,00*	**CR 86413**
9.835 *249,80*	1.575 *40,00*	LDSLV4	10.023 *254,58*	**CR 90773**
10.000 *254,00*	1.000 *25,40*	LDSLV3	10.188 *258,78*	**CR 90070**

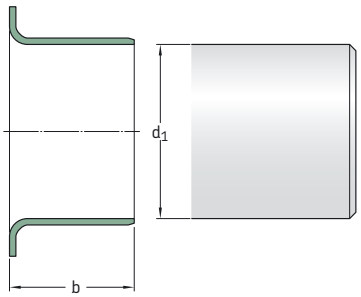

LDSLV3

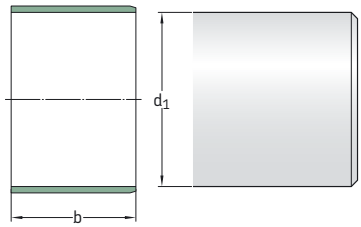

LDSLV4

Shaft diameter d_1	**Sleeve width** b	**Design**	**For nominal seal inside diameter**	**Designation**
in./*mm*		–	in./*mm*	–
10.063 *255,60*	2.250 *57,15*	LDSLV4	10.250 *260,35*	**CR 86000**
10.188 *258,78*	1.125 *28,58*	LDSLV4	10.375 *263,53*	**CR 84962**
10.236 *260,00*	1.968 *50,00*	LDSLV3	10.424 *264,77*	**CR 87738**
10.313 *261,95*	2.250 *57,15*	LDSLV3	10.500 *266,70*	**CR 85191**
	2.000 *50,80*	LDSLV4	10.500 *266,70*	**CR 85629**
10.441 *265,20*	2.165 *55,00*	LDSLV4	10.629 *269,98*	**CR 86798**
10.500 *266,70*	2.750 *69,85*	LDSLV4	10.688 *271,48*	**CR 86013**
10.557 *268,15*	2.250 *44,45*	LDSLV4	10.745 *272,92*	**CR 85491**
10.562 *268,27*	1.750 *44,45*	LDSLV4	10.750 *273,05*	**CR 86468**
	1.813 *46,05*	LDSLV4	10.750 *273,05*	**CR 86544**
	0.984 *24,99*	LDSLV4	10.750 *273,05*	**CR 90800**
10.563 *268,30*	1.500 *38,10*	LDSLV4	10.563 *268,30*	**CR 87768**
10.750 *273,05*	2.500 *63,50*	LDSLV4	10.938 *277,83*	**CR 86435**
10.813 *274,64*	1.000 *25,40*	LDSLV3	11.000 *279,40*	**CR 81389**
	2.000 *50,80*	LDSLV4	11.000 *279,40*	**CR 85033**
10.846 *275,50*	0.709 *18,00*	LDSLV4	11.034 *280,26*	**CR 86601**
10.875 *276,23*	2.000 *50,80*	LDSLV4	11.063 *281,00*	**CR 84510**

Shaft diameter d_1	**Sleeve width** b	**Design**	**For nominal seal inside diameter**	**Designation**
in./*mm*		–	in./*mm*	–
11.000 *279,40*	2.500 *63,50*	LDSLV4	11.188 *284,18*	**CR 86454**
	1.500 *38,10*	LDSLV4	11.188 *284,18*	**CR 86486**
11.023 *280,00*	1.181 *30,00*	LDSLV4	11.212 *284,78*	**CR 87142**
11.031 *280,20*	1.260 *32,00*	LDSLV4	11.219 *284,96*	**CR 87525**
11.062 *280,77*	1.750 *44,45*	LDSLV4	11.250 *285,75*	**CR 85469**
11.187 *284,15*	1.250 *31,75*	LDSLV4	11.375 *288,93*	**CR 86269**
11.188 *284,18*	2.250 *57,15*	LDSLV4	11.375 *288,93*	**CR 85212**
11.190 *284,23*	2.250 *57,15*	LDSLV4	11.378 *289,00*	**CR 87566**
11.313 *287,34*	1.500 *38,10*	LDSLV4	11.500 *292,10*	**CR 84094**
11.375 *288,93*	2.250 *57,15*	LDSLV4	11.563 *293,70*	**CR 86145**
11.417 *290,00*	1.750 *44,45*	LDSLV4	11.605 *294,77*	**CR 86441**
11.500 *292,10*	0.750 *19,05*	LDSLV4	11.688 *296,88*	**CR 90761**
11.562 *293,68*	1.000 *25,40*	LDSLV4	11.562 *293,67*	**CR 90333**
11.623 *295,22*	1.417 *36,00*	LDSLV3	11.811 *300,00*	**CR 87875**
11.750 *298,45*	2.375 *60,33*	LDSLV3	11.938 *303,23*	**CR 87872**
11.812 *300,03*	1.125 *28,56*	LDSLV4	12.000 *304,80*	**CR 86687**

Wear sleeves, series LDSLV – inch sizes

d_1 **11.813 – 19.813** in.

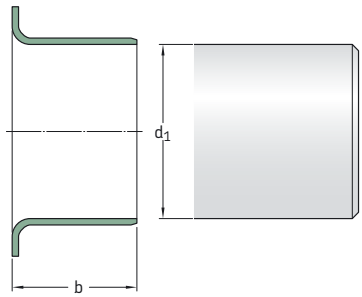

LDSLV3

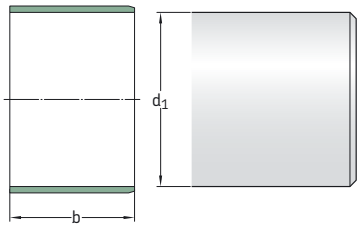

LDSLV4

Shaft diameter d_1	Sleeve width b	Design	For nominal seal inside diameter	Designation
in./*mm*		–	in./*mm*	–
11.813	2.250	LDSLV3	12.000	**CR 84819**
300,05	*57,15*		*304,80*	
	2.750	LDSLV4	12.000	**CR 85844**
	69,85		*304,80*	
	1.500	LDSLV4	12.000	**CR 85979**
	38,10		*304,80*	
11.968	0.709	LDSLV4	12.156	**CR 86600**
304,00	*18,01*		*308,76*	
12.000	2.250	LDSLV4	12.188	**CR 85577**
304,80	*57,15*		*309,58*	
	2.250	LDSLV3	12.188	**CR 87406**
	57,15		*309,58*	
12.063	0.625	LDSLV4	12.250	**CR 85418**
306,40	*15,88*		*311,15*	
	2.500	LDSLV3	12.250	**CR 86404**
	63,50		*311,15*	
12.312	1.500	LDSLV4	12.500	**CR 90174**
312,73	*38,10*		*317,50*	
12.313	0.750	LDSLV4	12.500	**CR 83760**
312,74	*19,05*		*317,50*	
12.500	2.125	LDSLV3	12.688	**CR 86169**
317,50	*53,98*		*322,28*	
12.598	0.980	LDSLV3	12.786	**CR 87434**
320,00	*25,00*		*324,76*	
12.750	1.125	LDSLV3	12.938	**CR 82099**
323,85	*28,58*		*328,63*	
	0.688	LDSLV4	12.938	**CR 87513**
	17,48		*328,63*	
	1.500	LDSLV3	12.938	**CR 90143**
	38,10		*328,63*	
12.813	1.375	LDSLV4	13.000	**CR 84263**
325,44	*34,93*		*330,20*	
	2.000	LDSLV3	13.000	**CR 84390**
	50,80		*330,20*	
	1.000	LDSLV4	13.000	**CR 86258**
	25,40		*330,20*	
	2.500	LDSLV4	13.000	**CR 86722**
	63,50		*330,20*	
13.000	1.750	LDSLV4	13.188	**CR 85535**
330,20	*25,40*		*334,98*	

Shaft diameter d_1	Sleeve width b	Design	For nominal seal inside diameter	Designation
in./*mm*		–	in./*mm*	–
13.063	1.125	LDSLV4	13.250	**CR 84963**
331,80	*28,58*		*336,55*	
13.313	2.000	LDSLV3	13.500	**CR 85852**
338,15	*50,80*		*342,90*	
	0.813	LDSLV4	13.500	**CR 86688**
	20,65		*342,90*	
	1.500	LDSLV4	13.500	**CR 87463**
	38,10		*342,90*	
13.813	1.500	LDSLV3	14.000	**CR 81390**
350,84	*38,10*		*355,60*	
	2.000	LDSLV4	14.000	**CR 85179**
	50,80		*355,60*	
14.000	1.500	LDSLV3	14.188	**CR 81352**
355,60	*38,10*		*360,38*	
	1.375	LDSLV3	14.188	**CR 89951**
	34,93		*360,38*	
14.173	1.000	LDSLV4	14.361	**CR 87445**
359,99	*25,40*		*364,77*	
14.313	1.500	LDSLV4	14.500	**CR 86429**
363,55	*38,10*		*368,30*	
14.438	2.500	LDSLV3	14.625	**CR 86403**
366,73	*63,50*		*371,48*	
14.500	1.000	LDSLV4	14.688	**CR 85914**
368,30	*25,40*		*373,08*	
14.813	2.125	LDSLV3	15.000	**CR 81391**
376,24	*54,00*		*381,00*	
	1.500	LDSLV4	15.000	**CR 87723**
	38,10		*381,00*	
15.000	1.000	LDSLV4	15.188	**CR 87247**
381,00	*25,40*		*385,78*	
15.062	0.750	LDSLV4	15.250	**CR 90272**
382,58	*19,05*		*387,35*	
15.066	1.000	LDSLV3	15.254	**CR 87871**
382,68	*25,40*		*387,45*	
15.188	2.500	LDSLV4	15.375	**CR 87569**
385,77	*63,50*		*390,53*	

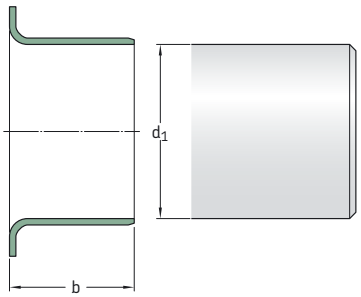

LDSLV3

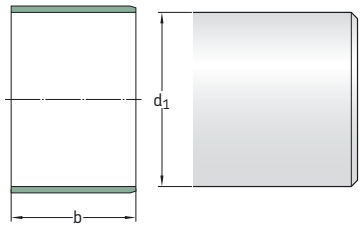

LDSLV4

Shaft diameter d_1	**Sleeve width** b	**Design**	**For nominal seal inside diameter**	**Designation**
in./*mm*		–	in./*mm*	–
15.250 *387,35*	0.750 *19,05*	LDSLV3	15.438 *392,13*	**CR 84964**
15.560 *395,22*	0.906 *23,01*	LDSLV4	15.750 *400,05*	**CR 85582**
15.812 *401,63*	2.500 *63,50*	LDSLV3	16.000 *406,40*	**CR 87634**
15.813 *401,65*	2.000 *50,80*	LDSLV4	16.000 *406,40*	**CR 85181**
	2.500 *63,50*	LDSLV4	16.000 *406,40*	**CR 86407**
	2.000 *50,80*	LDSLV3	16.000 *406,40*	**CR 87446**
15.998 *406,35*	2.250 *57,15*	LDSLV3	16.188 *411,18*	**CR 85908**
16.000 *406,40*	2.000 *50,80*	LDSLV3	16.188 *411,18*	**CR 81354**
16.063 *408,00*	1.250 *31,75*	LDSLV4	16.250 *412,75*	**CR 86175**
	1.300 *33,02*	LDSLV4	16.250 *412,75*	**CR 86426**
	2.000 *50,80*	LDSLV4	16.250 *412,75*	**CR 86575**
	0.500 *12,70*	LDSLV4	16.250 *412,75*	**CR 87613**
16.313 *414,35*	2.000 *50,80*	LDSLV4	16.500 *419,10*	**CR 84697**
16.750 *425,45*	1.500 *38,10*	LDSLV4	16.938 *430,23*	**CR 87585**
16.812 *427,02*	1.000 *25,40*	LDSLV4	17.000 *431,80*	**CR 86737**
16.813 *427,00*	2.250 *57,15*	LDSLV4	17.000 *431,80*	**CR 84616**
17.250 *438,15*	2.000 *50,80*	LDSLV4	17.438 *442,93*	**CR 84576**
17.250 *438,15*	1.000 *25,40*	LDSLV4	17.438 *442,93*	**CR 90779**

Shaft diameter d_1	**Sleeve width** b	**Design**	**For nominal seal inside diameter**	**Designation**
in./*mm*		–	in./*mm*	–
17.313 *439,75*	1.500 *38,10*	LDSLV4	17.500 *444,50*	**CR 86430**
17.449 *443,20*	2.000 *50,80*	LDSLV4	17.637 *447,98*	**CR 85762**
17.500 *444,50*	1.250 *31,75*	LDSLV4	17.688 *449,28*	**CR 90770**
17.543 *445,59*	2.362 *60,00*	LDSLV4	17.731 *450,37*	**CR 86799**
17.750 *450,85*	2.500 *63,50*	LDSLV3	17.938 *455,63*	**CR 86631**
17.750 *450,85*	1.250 *31,75*	LDSLV4	17.938 *455,63*	**CR 90774**
17.812 *452,42*	2.125 *53,98*	LDSLV4	18.000 *457,20*	**CR 87271**
17.813 *452,45*	2.500 *63,50*	LDSLV3	18.000 *457,20*	**CR 86405**
18.163 *461,34*	2.000 *50,80*	LDSLV4	18.350 *466,09*	**CR 86343**
18.312 *465,13*	1.191 *30,25*	LDSLV4	18.500 *469,90*	**CR 90790**
18.813 *477,82*	1.750 *44,45*	LDSLV4	19.000 *482,60*	**CR 86563**
	2.500 *63,50*	LDSLV4	19.000 *482,60*	**CR 86716**
	2.250 *57,15*	LDSLV4	19.000 *482,60*	**CR 87015**
19.496 *495,20*	2.362 *60,00*	LDSLV4	19.684 *499,97*	**CR 87631**
19.497 *495,20*	1.575 *40,00*	LDSLV4	19.497 *495,22*	**CR 87785**
19.500 *495,30*	1.250 *31,75*	LDSLV4	19.688 *500,08*	**CR 90769**
19.563 *496,90*	2.750 *69,85*	LDSLV4	19.750 *501,65*	**CR 85654**
19.813 *503,25*	1.250 *31,75*	LDSLV4	20.000 *508,00*	**CR 84781**

Wear sleeves, series LDSLV – inch sizes

d_1 **20.312 – 42.500** in.

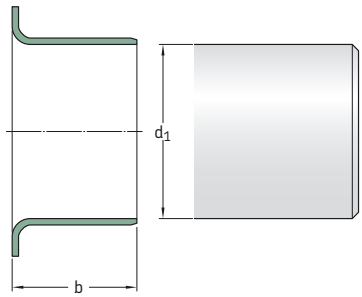

LDSLV3

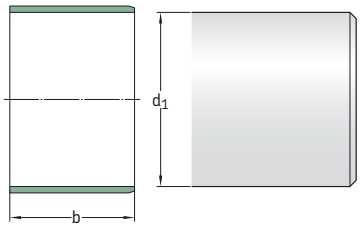

LDSLV4

Shaft diameter d_1	Sleeve width b	Design	For nominal seal inside diameter	Designation
in./*mm*		–	in./*mm*	–
20.312 *515,92*	1.000 *25,40*	LDSLV4	20.500 *520,70*	**CR 86739**
20.813 *528,65*	2.125 *53,98*	LDSLV4	21.000 *533,40*	**CR 85367**
	1.250 *31,75*	LDSLV3	21.000 *533,40*	**CR 85800**
	2.500 *63,50*	LDSLV4	21.000 *533,40*	**CR 87298**
20.865 *529,97*	2.250 *57,15*	LDSLV4	21.053 *534,75*	**CR 90805**
20.990 *533,15*	2.250 *57,15*	LDSLV3	21.178 *537,92*	**CR 84579**
21.000 *533,40*	2.250 *57,15*	LDSLV4	21.188 *538,18*	**CR 87090**
21.803 *553,80*	2.362 *60,00*	LDSLV4	21.991 *558,57*	**CR 87069**
21.813 *554,04*	2.250 *57,15*	LDSLV4	22.000 *558,80*	**CR 84590**
22.250 *565,15*	1.000 *25,40*	LDSLV3	22.438 *569,93*	**CR 85691**
22.303 *566,50*	2.362 *60,00*	LDSLV4	22.491 *571,27*	**CR 87070**
22.313 *566,75*	1.250 *31,75*	LDSLV4	22.500 *571,50*	**CR 85907**
22.812 *579,43*	2.000 *50,80*	LDSLV4	23.000 *584,20*	**CR 90163**
23.000 *584,20*	2.000 *50,80*	LDSLV4	23.188 *588,98*	**CR 90146**
23.434 *595,22*	0.984 *25,00*	LDSLV4	23.434 *595,22*	**CR 87777**
23.687 *601,65*	1.950 *49,53*	LDSLV4	23.875 *606,43*	**CR 87907**
23.812 *604,83*	0.750 *19,05*	LDSLV4	24.000 *609,60*	**CR 87922**
	2.500 *63,50*	LDSLV4	24.000 *609,60*	**CR 87960**

Shaft diameter d_1	Sleeve width b	Design	For nominal seal inside diameter	Designation
in./*mm*		–	in./*mm*	–
25.000 *635,00*	2.500 *63,50*	LDSLV4	25.188 *639,78*	**CR 86567**
25.312 *642,93*	2.500 *63,50*	LDSLV4	25.500 *647,70*	**CR 87802**
25.313 *642,95*	2.000 *50,80*	LDSLV4	25.500 *647,70*	**CR 86091**
26.000 *660,40*	2.250 *63,50*	LDSLV3	26.188 *665,18*	**CR 86640**
26.312 *668,33*	1.375 *34,93*	LDSLV4	26.500 *673,10*	**CR 90809**
26.813 *681,05*	1.250 *31,75*	LDSLV4	27.000 *685,80*	**CR 85384**
26.813 *681,05*	2.250 *57,15*	LDSLV4	27.000 *685,80*	**CR 85531**
27.000 *685,80*	2.000 *50,80*	LDSLV4	27.188 *690,58*	**CR 86841**
27.063 *687,40*	2.250 *57,15*	LDSLV4	27.250 *692,15*	**CR 84764**
27.313 *693,75*	2.250 *57,15*	LDSLV4	27.500 *698,50*	**CR 85011**
27.500 *695,50*	2.250 *57,15*	LDSLV4	27.688 *703,28*	**CR 84711**
27.812 *706,43*	2.500 *63,50*	LDSLV4	28.000 *711,20*	**CR 87421**
28.312 *719,13*	2.313 *58,75*	LDSLV3	28.500 *723,90*	**CR 87623**
28.813 *731,84*	2.250 *57,15*	LDSLV4	29.000 *736,60*	**CR 84641**
29.813 *757,24*	2.250 *57,15*	LDSLV4	30.000 *762,00*	**CR 84642**
30.000 *762,00*	2.500 *63,50*	LDSLV3	30.188 *766,78*	**CR 86641**
30.309 *769,85*	1.375 *34,93*	LDSLV4	30.497 *774,62*	**CR 87530**

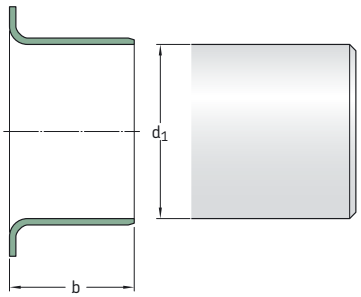

LDSLV3

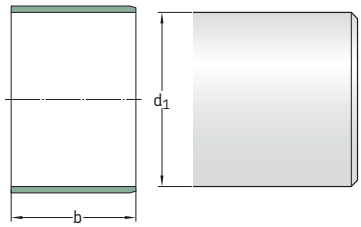

LDSLV4

Shaft diameter d_1	**Sleeve width** b	**Design**	**For nominal seal inside diameter**	**Designation**
in./*mm*		–	in./*mm*	–
30.312 *769,93*	2.500 *63,50*	LDSLV3	30.500 *774,70*	**CR 87842**
30.813 *782,65*	2.000 *50,80*	LDSLV4	31.000 *787,40*	**CR 85039**
31.812 *808,03*	2.500 *63,50*	LDSLV4	32.000 *812,80*	**CR 90810**
32.313 *820,75*	2.000 *50,80*	LDSLV4	32.500 *825,50*	**CR 86090**
32.812 *833,43*	2.220 *56,39*	LDSLV4	33.000 *838,20*	**CR 87850**
33.313 *846,15*	2.625 *66,68*	LDSLV4	33.500 *850,90*	**CR 84730**
34.312 *871,58*	1.750 *44,45*	LDSLV4	34.500 *876,30*	**CR 87529**
35.313 *896,95*	2.500 *63,50*	LDSLV4	35.500 *901,70*	**CR 85814**
35.812 *909,63*	1.500 *38,10*	LDSLV4	36.000 *914,40*	**CR 90332**
36.375 *923,93*	2.500 *63,50*	LDSLV4	36.555 *928,50*	**CR 86111**
36.813 *935,05*	2.500 *63,50*	LDSLV4	37.000 *939,80*	**CR 86458**
37.813 *960,45*	1.500 *38,10*	LDSLV4	38.000 *965,20*	**CR 86973**
38.000 *965,20*	1.500 *38,10*	LDSLV4	38.188 *969,98*	**CR 86840**
38.500 *977,90*	1.500 *38,10*	LDSLV4	38.688 *982,68*	**CR 81753**
38.813 *985,85*	2.125 *53,98*	LDSLV4	39.000 *990,60*	**CR 85123**
39.813 *1011,24*	2.125 *54,00*	LDSLV4	40.000 *1016,00*	**CR 81826**

Shaft diameter d_1	**Sleeve width** b	**Design**	**For nominal seal inside diameter**	**Designation**
in./*mm*		–	in./*mm*	–
41.312 *1049,33*	1.968 *49,99*	LDSLV4	41.500 *1054,10*	**CR 89948**
42.063 *1068,40*	2.125 *53,98*	LDSLV4	42.250 *1073,15*	**CR 85038**
42.125 *1070,00*	2.125 *53,98*	LDSLV4	42.313 *1074,75*	**CR 87054**
42.312 *1074,72*	1.250 *31,75*	LDSLV4	42.500 *1079,50*	**CR 87379**
42.500 *1079,50*	1.250 *31,75*	LDSLV4	42.688 *1084,28*	**CR 87392**

SKF – the knowledge engineering company

From the company that invented the self-aligning ball bearing 100 years ago, SKF has evolved into a knowledge engineering company that is able to draw on five technology platforms to create unique solutions for its customers. These platforms include bearings, bearing units and seals, of course, but extend to other areas including: lubricants and lubrication systems, critical for long bearing life in many applications; mechatronics that combine mechanical and electronics knowledge into systems for more effective linear motion and sensorized solutions; and a full range of services, from design and logistics support to conditioning monitoring and reliability systems.

Though the scope has broadened, SKF continues to maintain the world's leadership in the design, manufacture and marketing of rolling bearings, as well as complementary products such as radial seals. SKF also holds an increasingly important position in the market for linear motion products, high-precision aerospace bearings, machine tool spindles and plant maintenance services.

The SKF Group is globally certified to ISO 14001, the international standard for environmental management, as well as OHSAS 18001, the health and safety management standard. Individual divisions have been approved for quality certification in accordance with either ISO 9000 or QS 9000.

With some 100 manufacturing sites worldwide and sales companies in 70 countries, SKF is a truly international corporation. In addition, our distributors and dealers in some 15 000 locations around the world, an e-business marketplace and a global distribution system put SKF close to customers for the supply of both products and services. In essence, SKF solutions are available wherever and whenever customers need them. Overall, the SKF brand and the corporation are stronger than ever. As the knowledge engineering company, we stand ready to serve you with world-class product competencies, intellectual resources, and the vision to help you succeed.



© Airbus – photo: e*m company, H. Goussé

Evolving by-wire technology
SKF has a unique expertise in fast-growing by-wire technology, from fly-by-wire, to drive-by-wire, to work-by-wire. SKF pioneered practical fly-by-wire technology and is a close working partner with all aerospace industry leaders. As an example, virtually all aircraft of the Airbus design use SKF by-wire systems for cockpit flight control.

SKF is also a leader in automotive by-wire technology, and has partnered with automotive engineers to develop two concept cars, which employ SKF mechatronics for steering and braking. Further by-wire development has led SKF to produce an all-electric forklift truck, which uses mechatronics rather than hydraulics for all controls.

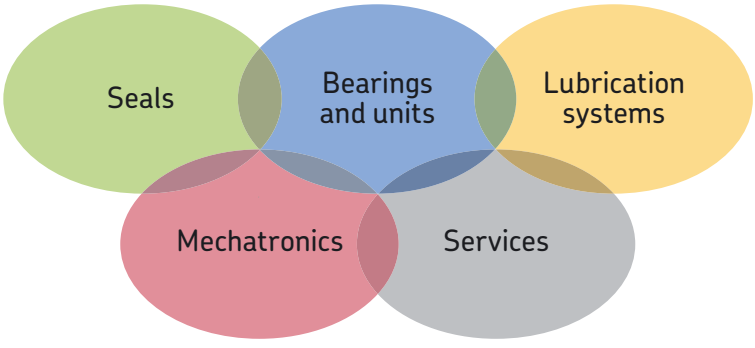





Harnessing wind power
The growing industry of wind-generated electric power provides a source of clean, green electricity. SKF is working closely with global industry leaders to develop efficient and trouble-free turbines, providing a wide range of large, highly specialized bearings and condition monitoring systems to extend equipment life of wind farms located in even the most remote and inhospitable environments.



Working in extreme environments
In frigid winters, especially in northern countries, extreme sub-zero temperatures can cause bearings in railway axleboxes to seize due to lubrication starvation. SKF created a new family of synthetic lubricants formulated to retain their lubrication viscosity even at these extreme temperatures. SKF knowledge enables manufacturers and end user customers to overcome the performance issues resulting from extreme temperatures, whether hot or cold. For example, SKF products are at work in diverse environments such as baking ovens and instant freezing in food processing plants.



Developing a cleaner cleaner
The electric motor and its bearings are the heart of many household appliances. SKF works closely with appliance manufacturers to improve their products' performance, cut costs, reduce weight, and reduce energy consumption. A recent example of this cooperation is a new generation of vacuum cleaners with substantially more suction. SKF knowledge in the area of small bearing technology is also applied to manufacturers of power tools and office equipment.



Maintaining a 350 km/h R&D lab
In addition to SKF's renowned research and development facilities in Europe and the United States, Formula One car racing provides a unique environment for SKF to push the limits of bearing technology. For over 50 years, SKF products, engineering and knowledge have helped make Scuderia Ferrari a formidable force in F1 racing. (The average racing Ferrari utilizes more than 150 SKF components.) Lessons learned here are applied to the products we provide to automakers and the aftermarket worldwide.



Delivering Asset Efficiency Optimization
Through SKF Reliability Systems, SKF provides a comprehensive range of asset efficiency products and services, from condition monitoring hardware and software to maintenance strategies, engineering assistance and machine reliability programmes. To optimize efficiency and boost productivity, some industrial facilities opt for an Integrated Maintenance Solution, in which SKF delivers all services under one fixed-fee, performance-based contract.



Planning for sustainable growth
By their very nature, bearings make a positive contribution to the natural environment, enabling machinery to operate more efficiently, consume less power, and require less lubrication. By raising the performance bar for our own products, SKF is enabling a new generation of high-efficiency products and equipment. With an eye to the future and the world we will leave to our children, the SKF Group policy on environment, health and safety, as well as the manufacturing techniques, are planned and implemented to help protect and preserve the earth's limited natural resources. We remain committed to sustainable, environmentally responsible growth.



® SKF and SPEEDI-SLEEVE are registered trademarks of the SKF Group.

Loctite is a registered trademark of Henkel KGaA.

© SKF Group 2007
The contents of this publication are the copyright of the publisher and may not be reproduced (even extracts) unless permission is granted. Every care has been taken to ensure the accuracy of the information contained in this publication but no liability can be accepted for any loss or damage whether direct, indirect or consequential arising out of the use of the information contained herein.

The data in this publication may differ from that shown in earlier publications because of redesign, technological developments or revised methods of calculation. SKF reserves the right to make continuing improvements to SKF products without prior notice with respect to materials, design and manufacturing methods, as well as changes necessitated by technological developments.

Publication **6403 EN** · August 2007

This publication supersedes publication 5149 E and 457027.

Printed in Sweden on environmentally friendly paper.

skf.com